Separate Controller Ionizer

Bar Type / Nozzle Type

IO-Link
* The IZT40 is not compatible with IO-Link.

CE RoHS

Space Saving

Bar type *IZT40/41/42 Series* — Height 37 mm x Width 30 mm

Nozzle type *IZT43 Series* — Height 32 mm x Width 16 mm

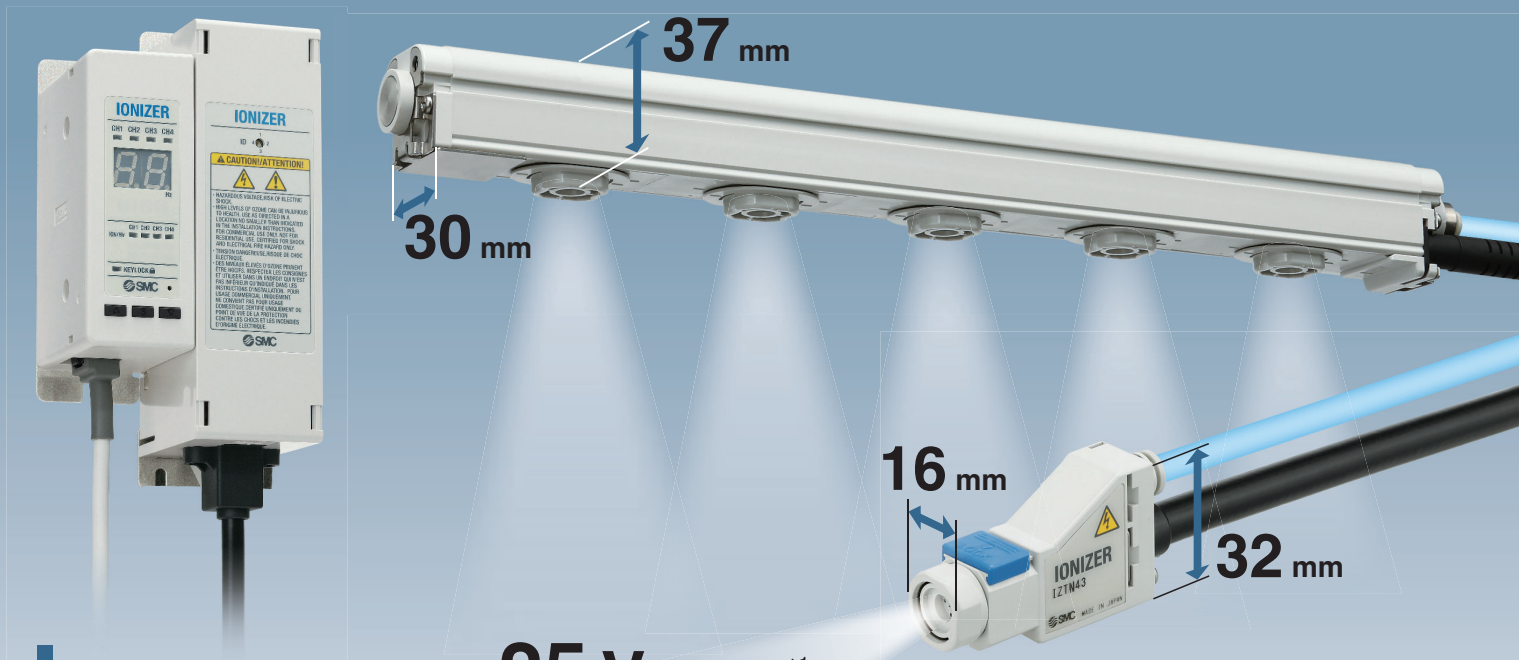

- **Potential amplitude: 25 V or less**[*1]
- **Rapid static neutralisation: Fastest time 0.1 s**[*2]
- **Static neutralisation is possible even when air is not being supplied.**

New IO-Link Compatible

- ON/OFF with a single communication line[*1] (Periodic transmission of set values and status for up to 4 channels)
- Reading of the device information and parameter batch settings are possible.

*1 Wiring with an auxiliary power line is required separately.

	Series	Type	Application	IO-Link
Bar	IZT42	Dual AC	For reducing the potential amplitude	●
Bar	IZT41	AC	For maintaining a constant offset voltage	●
Bar	IZT40	Standard	Simple operation by just turning the power on	—
Nozzle	IZT43	AC	For maintaining a constant offset voltage	●

*1 IZT42 installation height: 300 mm
*2 IZT40, 41
Conditions: Discharge time from 1000 V to 100 V
Object to be neutralised: Charged plate (150 mm x 150 mm, Capacitance 20 pF)
Installation distance: 100 mm (High speed static neutralisation cartridge, Tungsten electrode needle with air purge)
Bar length: 1120 mm

IZT40/41(-L)/42(-L)/43(-L) Series

SMC

CAT.EUS100-120D-UK

Dual AC Type *IZT42 Series* (Potential amplitude reduction specification)

Bar

Potential amplitude: 25 V or less[*1]

Rapid static neutralisation: 0.1 s[*2]

*1 IZT42 installation height: 300 mm
*2 IZT40, 41
Conditions: Discharge time from 1000 V to 100 V
Object to be neutralised: Charged plate (150 mm x 150 mm, Capacitance 20 pF)
Installation distance: 100 mm (High speed static neutralisation cartridge, Tungsten electrode needle with air purge)
Bar length: 1120 mm

The potential amplitude can be reduced with SMC's original dual AC type sensor.

Static neutralisation in consideration of damage to a device which is sensitive to electrostatic discharge (ESD) can be achieved. The potential amplitude applied to the applicable workpiece is reduced even if the workpiece is mounted within close proximity of the ionizer.

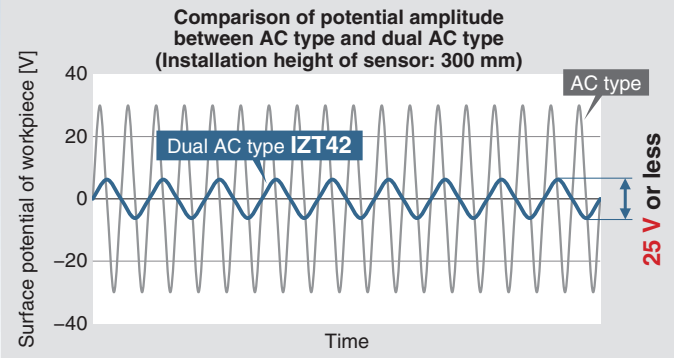

Dual AC type IZT42

+ ions and – ions are discharged at the same time to allow the + and – ions to reach the workpiece evenly, thereby reducing the potential amplitude.

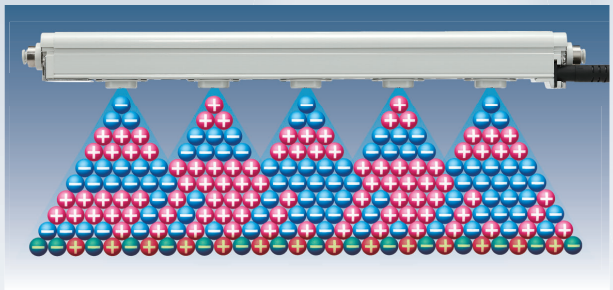

AC type IZT40, 41, 43

+ ion and – ion layers reach the workpiece alternately, which increases the potential amplitude.

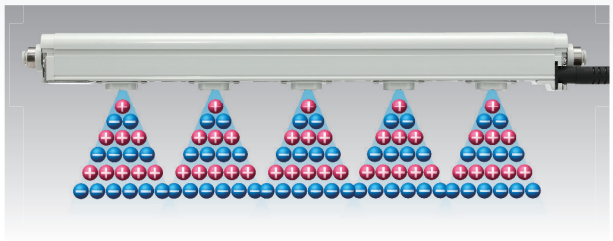

Application Examples

For the static neutralisation of glass substrates

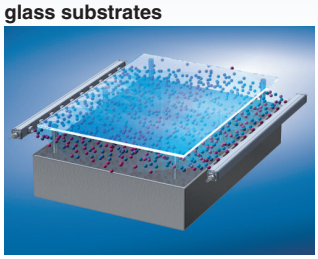

Prevents the breakage of glass substrates by the static electricity generated when the substrate is lifted from the surface plate

For the static neutralisation of electric substrates

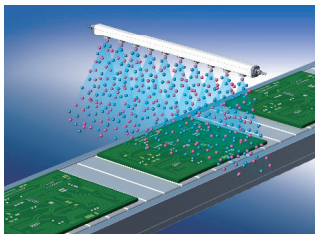

- Prevents element disruption due to discharge
- Prevents the adhesion of dust

AC Type *IZT41, 43 Series*

Bar Nozzle

• With auto balance function

* The controller can be used with either type.
Use a high voltage power supply module compatible with the selected type.

SMC

- **Emitter contamination detection continually displayed and output**
- **Individual ON/OFF command from an external input signal**

With auto balance function

The sensor is installed within the ionizer body and may be mounted anywhere.

The offset voltage (ion balance) in the static neutralisation area is controlled so that the voltage is maintained at a constant value by monitoring the ions emitted from the ionizer using the ground line.

Effect of auto balance (Image)

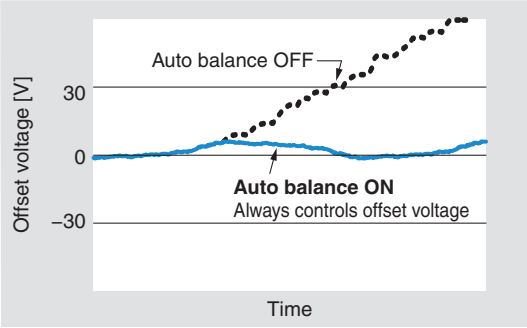

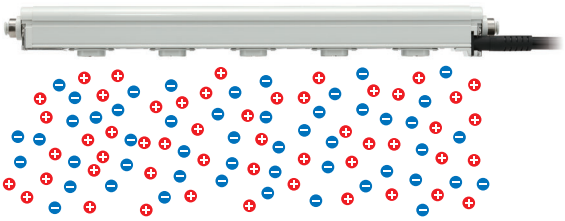

Monitoring +/– return current

Standard Type *IZT40 Series*

Bar

- **Simple operation: Can be controlled by powering the ionizer ON**

An AC adapter is available.
(The AC adapter can only be used for 1 ionizer.)

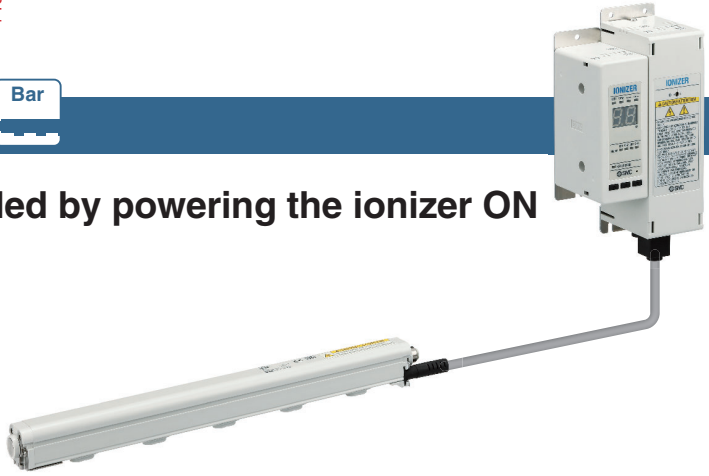

The compact body allows for space saving.

Bar

- **Reduced height**

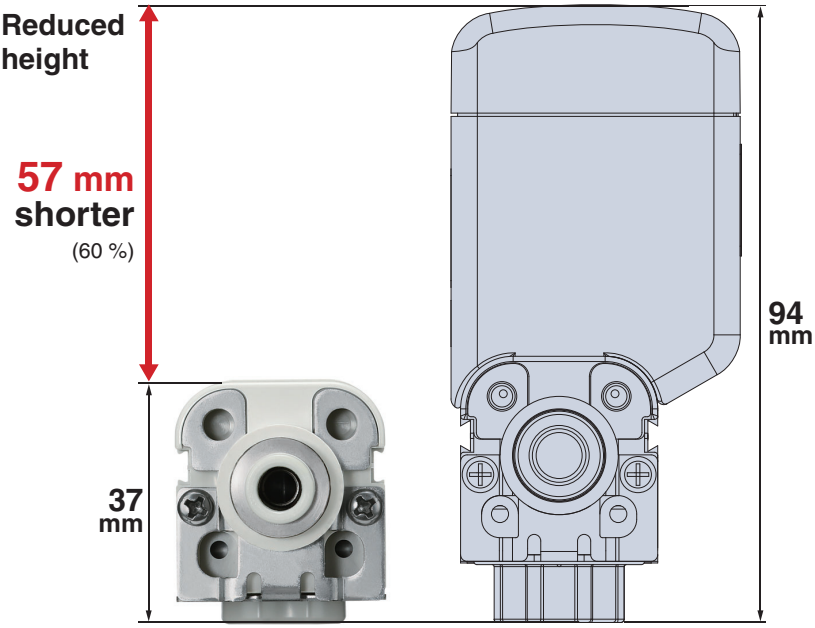

Separate controller
IZT40, 41, 42

Integrated type
IZS41, 42

- **Can be mounted in narrow spaces**

Static neutralisation of a rotary press

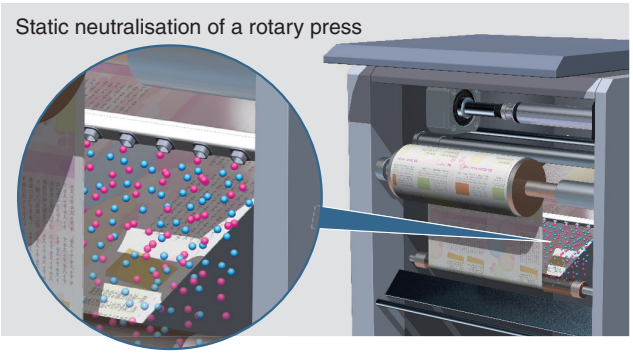

Static neutralisation during wafer production

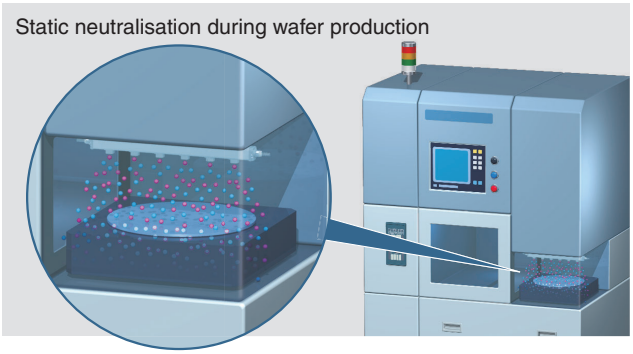

Space saving

Nozzle

Thickness 16 mm x Width 53 mm x Height 32 mm

- **For the removal of dust and static neutralisation by air blow**

For the static neutralisation of plastic bottles and particle elimination

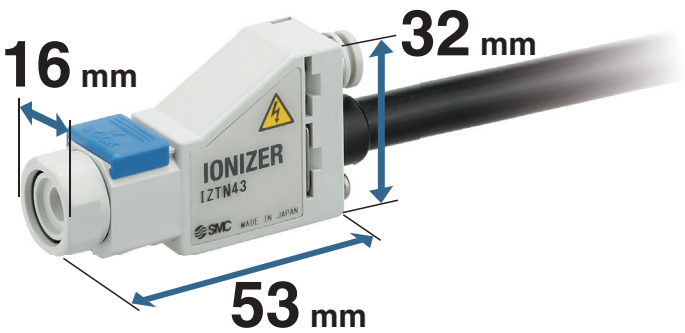

One controller can control a maximum of 4 ionizers.

Bar Nozzle

- **Mixed bar and nozzle connection is possible.**

Concentrated control is available.

- **Bar and nozzle errors can be detected.**
- **Contamination of the emitter can be monitored.**

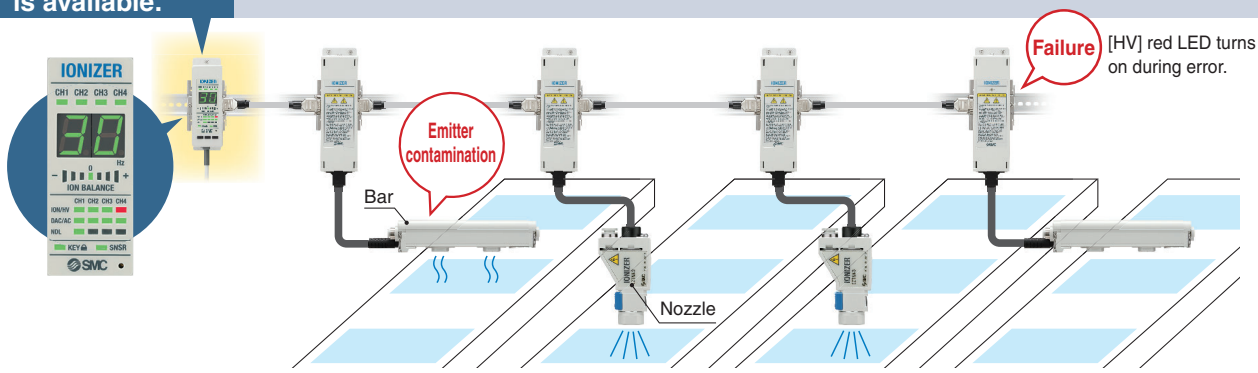

A flexible layout can be achieved due to the various module connection methods.

Bar Nozzle

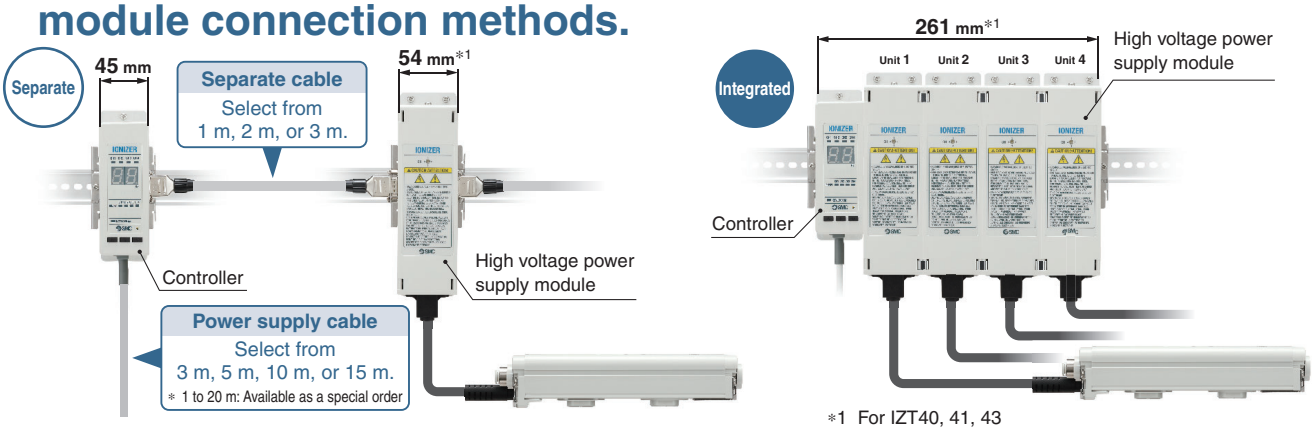

*1 For IZT40, 41, 43

- **Max. installation distance between controller and bar/nozzle: 15 m**

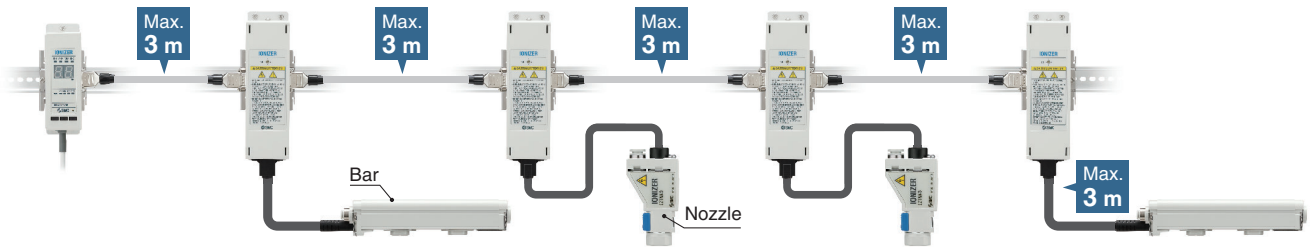

The simple installation of each module is possible by connector connection.

Bar Nozzle

- **The connector connection of cables is possible for each module after installation.**

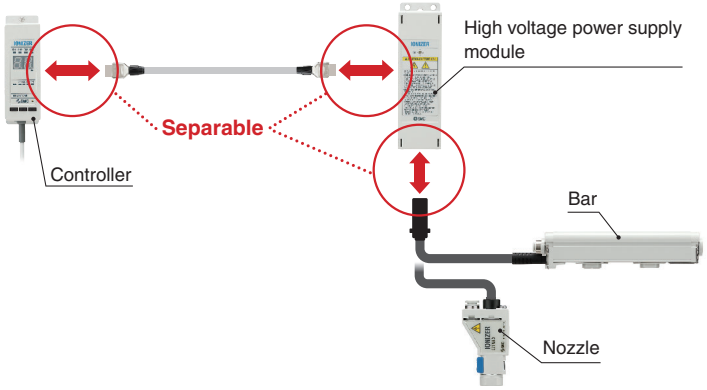

Easy insertion and removal due to connector connection

Bar Nozzle

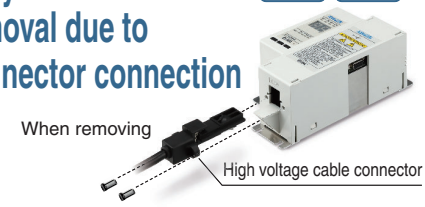

For the insertion and removal of high voltage cables

Nozzle

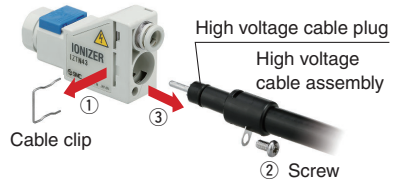

Bar Nozzle

Various low maintenance cartridges can be selected according to the application.

- **Minimises the contamination of emitters by discharging compressed air at the surface of the emitters**

Bar

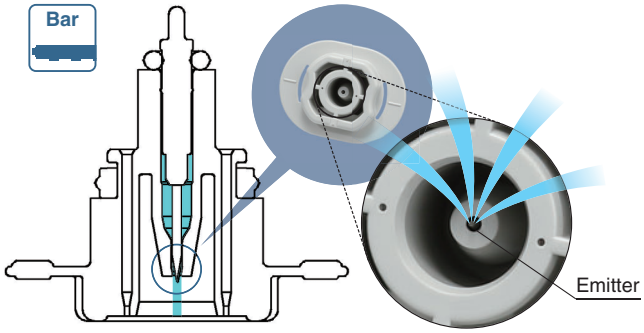

Air covers the emitter.

Nozzle

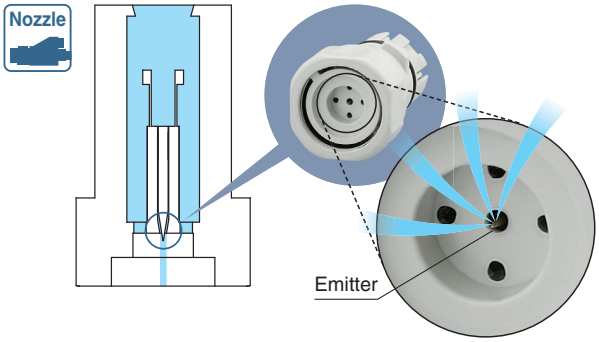

Air covers the emitter.

- **Emitter cartridge type**

	High speed static neutralisation cartridge	Energy saving static neutralisation cartridge
For Bar	**Long range static neutralisation and dust removal** 1 cartridge equipped with 2 assist air nozzles allows for high speed static neutralisation by transferring ionized air produced in the emitter to the workpiece.	**Short range static neutralisation** Reducing the number of assist nozzles by half for static neutralisation, which does not require a high volume of assist air due to the close distance to the object to be neutralised, allows for energy savings by reducing air consumption.

For Bar

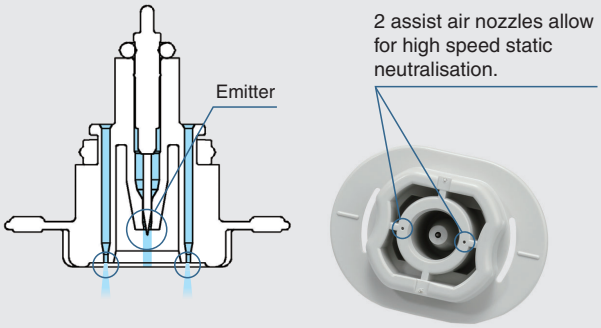

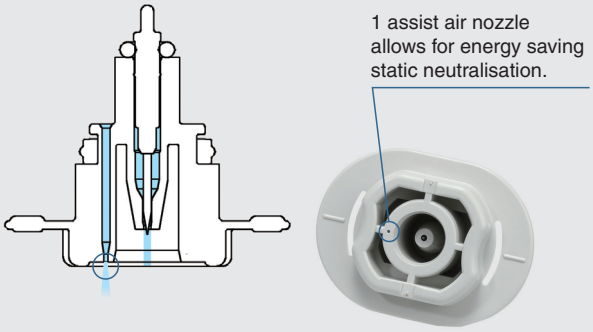

For Nozzle

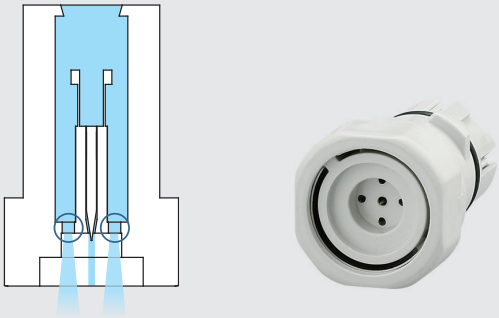

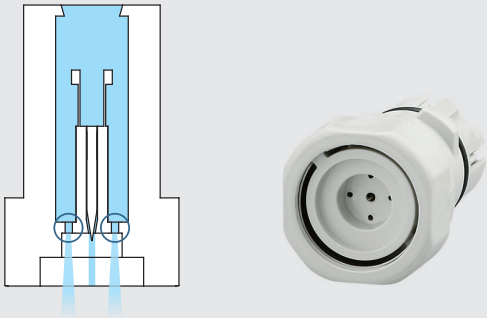

<For Nozzle> The external shape of the high speed static neutralisation cartridge and that of the energy saving static neutralisation cartridge is the same. However, as shown in the image above, the diameter of the holes differs.

Emitter material type

Tungsten/Single crystal silicon (for silicon wafers)

Bar

Tungsten
(Emitter cartridge colour: White)

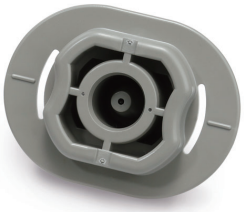

Silicon
(Emitter cartridge colour: Grey)

Nozzle

Tungsten
(Emitter cartridge colour: White)

Energy saving high-efficiency cartridge

Assist air amplified by the sucking in of ambient air (the ejector effect) allows for highly efficient static neutralisation through the efficient transfer of the produced ionized air.

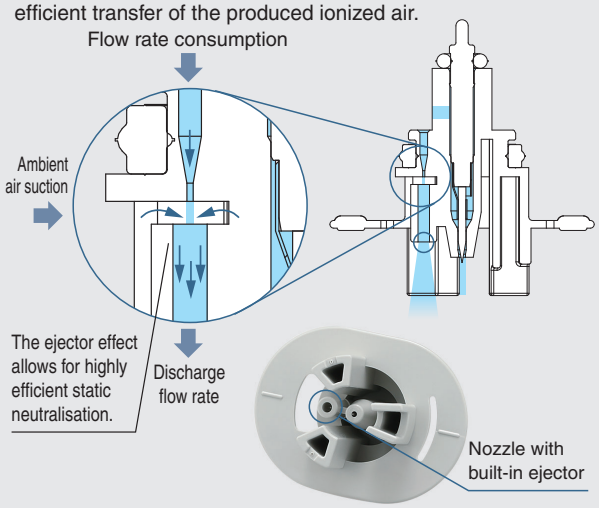

Flow rate for installation distance of each cartridge

Conditions: IZT41-112□ (Number of cartridges: 18 pcs.),
Discharge time 1 s

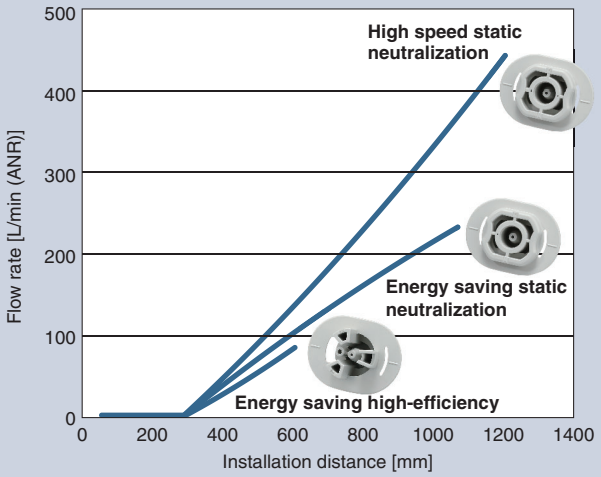

Flow rate for installation distance of each cartridge

Discharge time 1 s

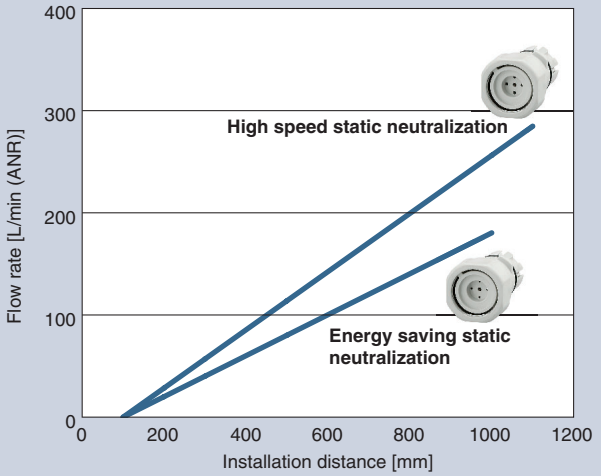

Air can be supplied by air piping on one side.

Bar

- **The optimal design of the piping port size allows for sufficient blow performance even with piping only on one side.**

Piping on both sides
Piping only on one side

High speed static neutralisation cartridge

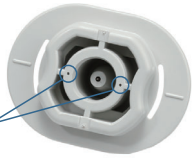

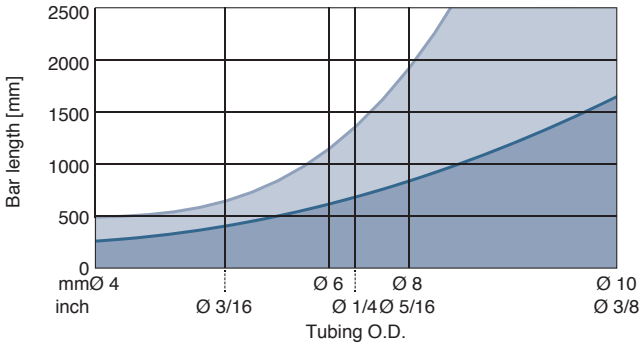

Energy saving static neutralisation cartridge

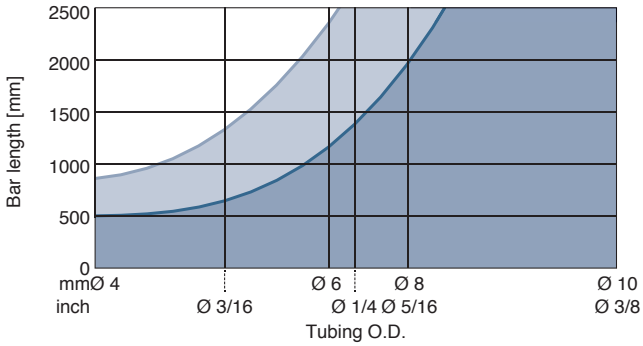

Energy saving high-efficiency cartridge

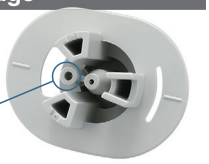

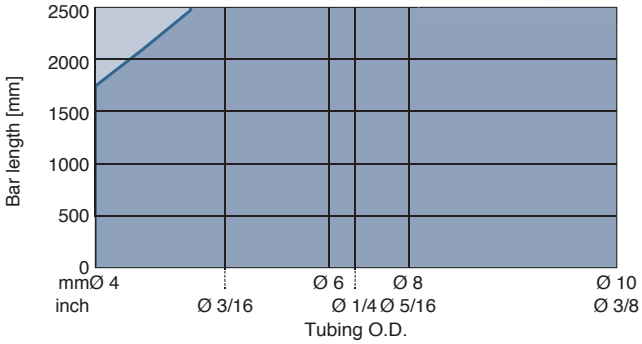

Air supply port position is selectable: Right side/ Left side/Both sides

Bar

Bar and high voltage cable lengths are selectable.

Bar Nozzle

p. 21, 25, 47

Bar length: Select a length in 60 mm increments from 160 to 2500 mm.
(Includes made-to-order options)

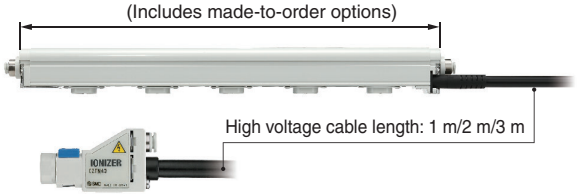

2 types of brackets are available.

Bar

For the bar type

When an adjustable mounting angle is required/Bracket 1

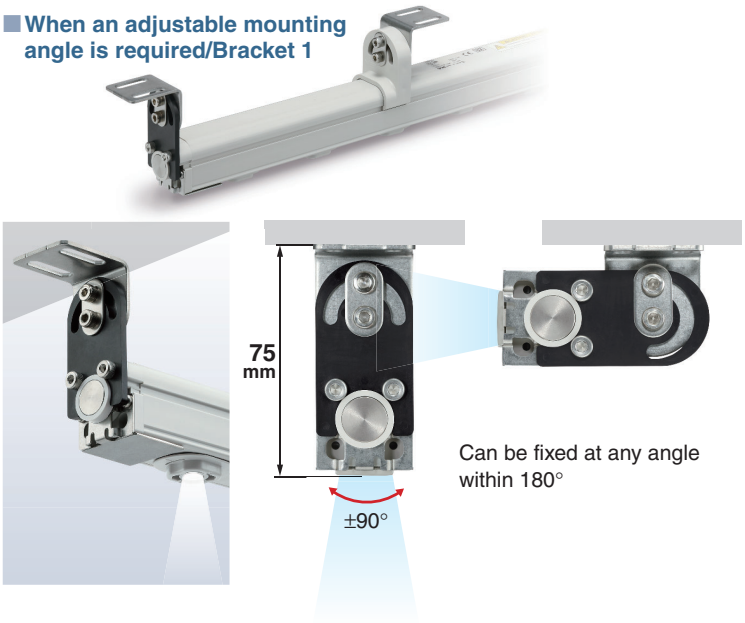

When space reduction is required/Bracket 2

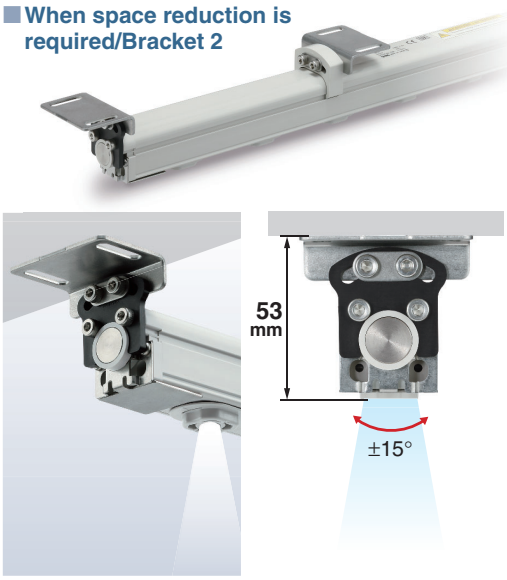

Nozzle

For the nozzle type

Angle adjustment bracket

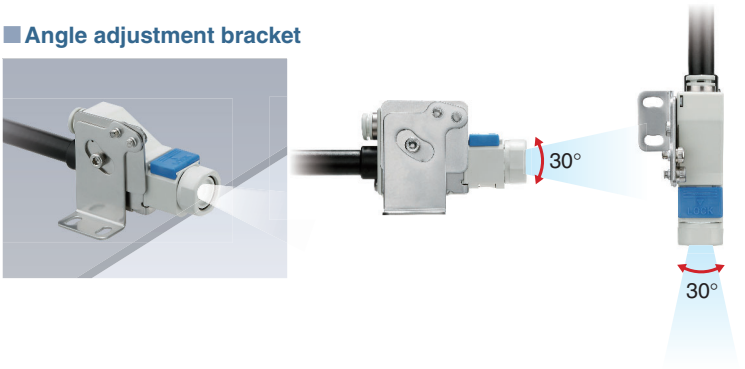

L-bracket

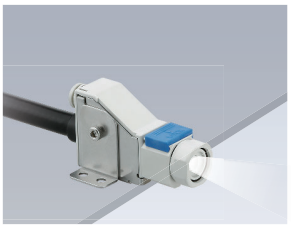

Emitter cartridge drop prevention

Bar Nozzle

- **Emitter cartridge drop prevention function**

Double-action locking

Bar type

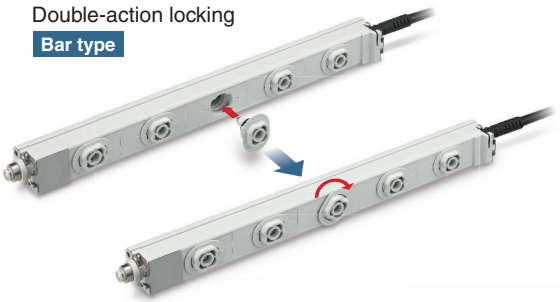

Nozzle type

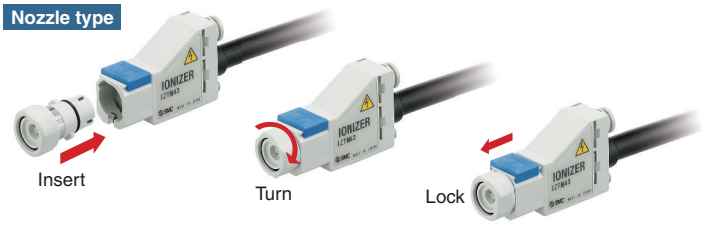

- **Drop prevention cover** Made to order

For increased cartridge drop prevention

＊ Only for the bar type

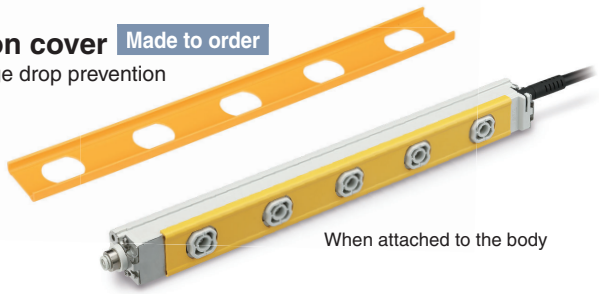

IO-Link

IO-Link is an open communication interface technology between the sensor/actuator and the I/O terminal that is an international standard: IEC 61131-9.

Visualization of operation and equipment status/Remote monitoring and control by communication

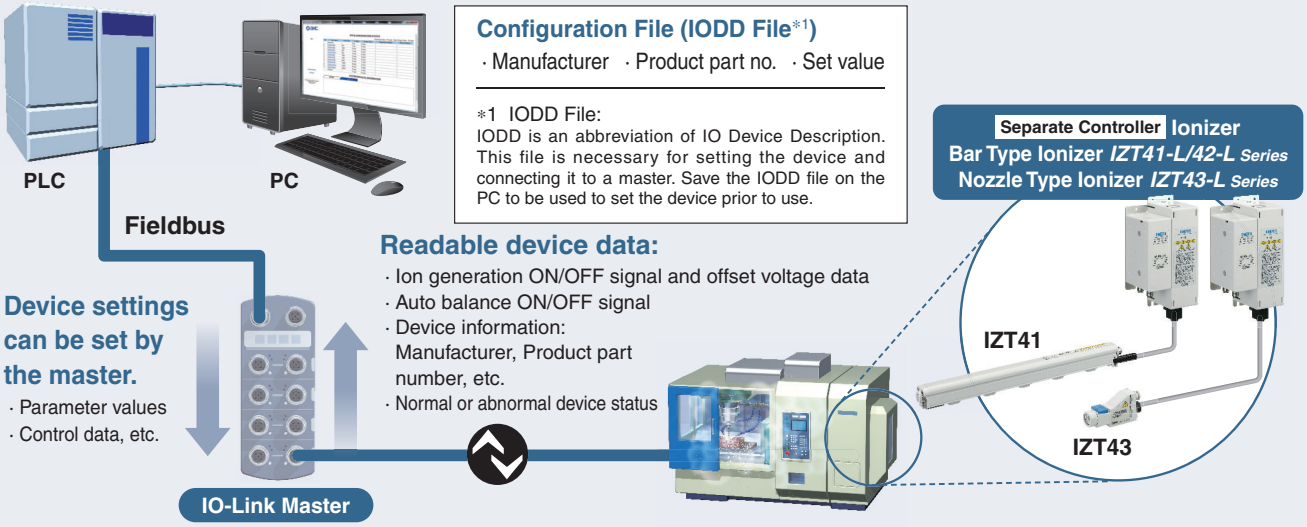

Configuration File (IODD File*1)

· Manufacturer · Product part no. · Set value

*1 IODD File:
IODD is an abbreviation of IO Device Description. This file is necessary for setting the device and connecting it to a master. Save the IODD file on the PC to be used to set the device prior to use.

Readable device data:

- Ion generation ON/OFF signal and offset voltage data
- Auto balance ON/OFF signal
- Device information: Manufacturer, Product part number, etc.
- Normal or abnormal device status

Device settings can be set by the master.

- Parameter values
- Control data, etc.

Automatic setting function [Data storage function]

When replacing the controller with another of the same type (the same device ID), the parameters (set values) stored in the IO-Link master are automatically copied (set) to the new controller.

Process Data

PD_IN

Bit offset	103	102	101	100	99	98	97	96
Item	CH1: Initial set status	CH2: Initial set status	CH3: Initial set status	CH4: Initial set status	CH1: Ion generation	CH2: Ion generation	CH3: Ion generation	CH4: Ion generation

Bit offset	95	94	93	92	91	90	89	88	87	86	85	84	83	82	81	80
Item	Reservation						CH1: Ion balance (10-bit signed integer)									
Bit offset	79	78	77	76	75	74	73	72	71	70	69	68	67	66	65	64
Item	Reservation						CH2: Ion balance (10-bit signed integer)									
Bit offset	63	62	61	60	59	58	57	56	55	54	53	52	51	50	49	48
Item	Reservation						CH3: Ion balance (10-bit signed integer)									
Bit offset	47	46	45	44	43	42	41	40	39	38	37	36	35	34	33	32
Item	Reservation						CH4: Ion balance (10-bit signed integer)									

It is possible to monitor the offset voltage value for each channel with the cyclic (periodic) data.

Bit offset	31	30	29	28	27	26	25	24
Item	Error diagnosis	CPU failure (Controller)	Power supply failure (Controller)	Power supply failure (High voltage power supply)	Non-connection of high voltage power supply module	Reservation		
Bit offset	23	22	21	20	19	18	17	16
Item	CH1: CPU failure	CH2: CPU failure	CH3: CPU failure	CH4: CPU failure	CH1: High voltage failure	CH2: High voltage failure	CH3: High voltage failure	CH4: High voltage failure
Bit offset	15	14	13	12	11	10	9	8
Item	CH1: Internal communication failure	CH2: Internal communication failure	CH3: Internal communication failure	CH4: Internal communication failure	CH1: Fan failure	CH2: Fan failure	CH3: Fan failure	CH4: Fan failure
Bit offset	7	6	5	4	3	2	1	0
Item	CH1: CH duplication failure	CH2: CH duplication failure	CH3: CH duplication failure	CH4: CH duplication failure	CH1: Maintenance notification	CH2: Maintenance notification	CH3: Maintenance notification	CH4: Maintenance notification

It is possible to find problems with the equipment in detail for each channel with the cyclic (periodic) data.

PD_OUT

Bit offset	71	70	69	68	67	66	65	64
Item	PD_OUT Valid/Invalid	Reservation			CH1: Ion generation	CH2: Ion generation	CH3: Ion generation	CH4: Ion generation

Bit offset	63	62	61	60	59	58	57	56	55	54	53	52	51	50	49	48
Item	Reservation						CH1: Offset voltage adjustment (10-bit signed integer)									
Bit offset	47	46	45	44	43	42	41	40	39	38	37	36	35	34	33	32
Item	Reservation						CH2: Offset voltage adjustment (10-bit signed integer)									
Bit offset	31	30	29	28	27	26	25	24	23	22	21	20	19	18	17	16
Item	Reservation						CH3: Offset voltage adjustment (10-bit signed integer)									
Bit offset	15	14	13	12	11	10	9	8	7	6	5	4	3	2	1	0
Item	Reservation						CH4: Offset voltage adjustment (10-bit signed integer)									

It is possible to adjust the offset voltage for each channel with the cyclic (periodic) data.

<Models and Functions>

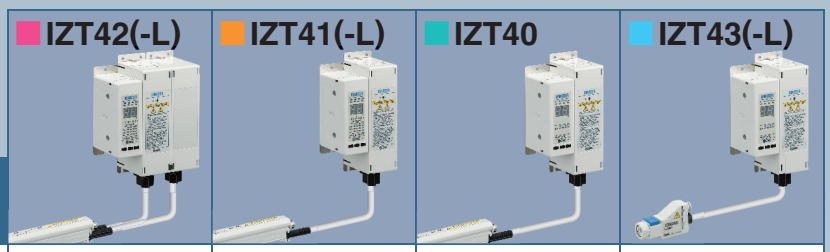

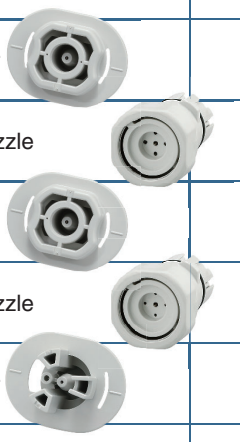

Series			IZT42(-L)	IZT41(-L)	IZT40	IZT43(-L)
Method of applying voltage			Dual AC	AC, DC*1	AC, DC*1	AC, DC*1
Auto balance			●	●	—	●
I/O			NPN/PNP (IZT42) IO-Link (IZT42-L)	NPN/PNP (IZT41) IO-Link (IZT41-L)	—	NPN/PNP (IZT43) IO-Link (IZT43-L)
Ion balance display			●	●	—	●
High voltage abnormality detection			●	●	●	●
Maintenance detection			●	●	—	●
Low maintenance emitter			●	●	●	●
Emitter cartridge	High speed static neutralisation	For Bar	●	●	●	—
		For Nozzle	—	—	—	●
	Energy saving static neutralisation	For Bar	●	●	●	—
		For Nozzle	—	—	—	●
	Energy saving high-efficiency	For Bar	●	●	●	—
One-touch fitting	Metric size		Ø 4, Ø 6, Ø 8, Ø 10	Ø 4, Ø 6, Ø 8, Ø 10	Ø 4, Ø 6, Ø 8, Ø 10	Ø 6
	Inch size		Ø 3/16", Ø 1/4", Ø 5/16", Ø 3/8"	Ø 3/16", Ø 1/4", Ø 5/16", Ø 3/8"	Ø 3/16", Ø 1/4", Ø 5/16", Ø 3/8"	Ø 1/4"
Bracket mounting			●	●	●	●
Made to order p. 25 • Non-standard bar length (-X10) • Model with emitter cartridge drop prevention cover (-X14)			●	●	●	—

*1 Apply cathode or anode to DC.

<Accessories (for Individual Parts)>

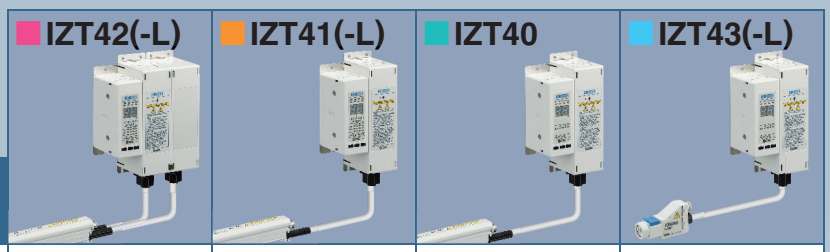

Series		IZT42(-L)	IZT41(-L)	IZT40	IZT43(-L)
Emitter cartridge pp. 29, 51	For Bar High speed static neutralisation / Energy saving static neutralisation / Energy saving high-efficiency Cartridge colour: White, Grey Emitter material: Tungsten, Silicon	●	●	●	—
	For Nozzle Tungsten (Colour: White)	—	—	—	●
Bracket pp. 29, 51	For Bar End ①, Intermediate ①, Intermediate ②, End ②	●	●	●	—
	For Nozzle Angle adjustment, L-bracket	—	—	—	●
Power supply cable (For transistor input/output) pp. 29, 51		● (IZT42)	● (IZT41)	●	● (IZT43)
Power supply cable (For IO-Link) pp. 29, 51		● (IZT42-L)	● (IZT41-L)	—	● (IZT43-L)
Communication cable (For IO-Link) pp. 29, 51		● (IZT42-L)	● (IZT41-L)	—	● (IZT43-L)
DIN rail mounting bracket for controller and high voltage power supply module pp. 29, 51	For Controller, For High voltage power supply module, For IZT40/41/43, For IZT42	●	●	●	●
High voltage cable holder pp. 29, 51	Straight, Elbow	●	●	●	●
Drop prevention cover (Only for the bar type) p. 30		●	●	●	—
AC adapter*1, *2 pp. 30, 52		● (IZT42)	● (IZT41)	● (IZT40)	● (IZT43)
Separate cable pp. 30, 52		●	●	●	●
Cleaning kit pp. 30, 52	For Bar	●	●	●	—
	For Nozzle	—	—	—	●
High voltage cable assembly (For Nozzle) p. 52		—	—	—	●
Body assembly (For Nozzle) p. 52		—	—	—	●

*1 Only for use with 1 ionizer bar/nozzle *2 Cannot be used when the input/output specification is IO-Link

<Application Examples: Bar Type>

For the static neutralisation of resin frames

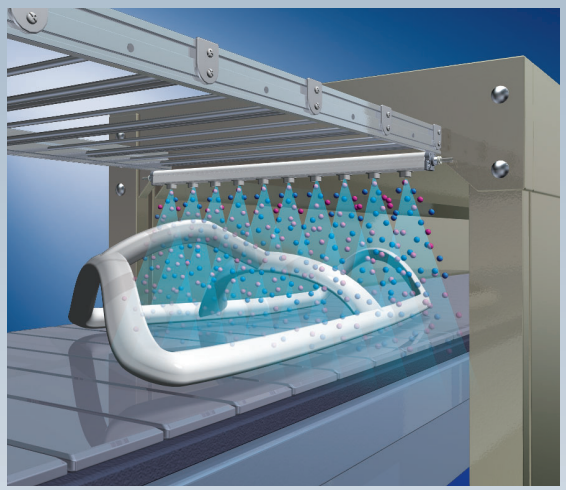

For the static neutralisation of film-molded goods

- Prevents goods from adhering to the conveyer
- Prevents the dispersion of finished goods

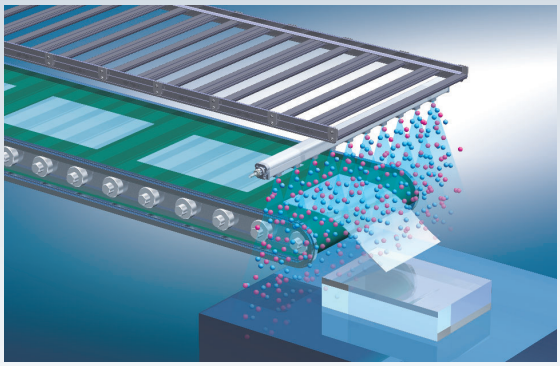

For the static neutralisation of substrate cutting machines

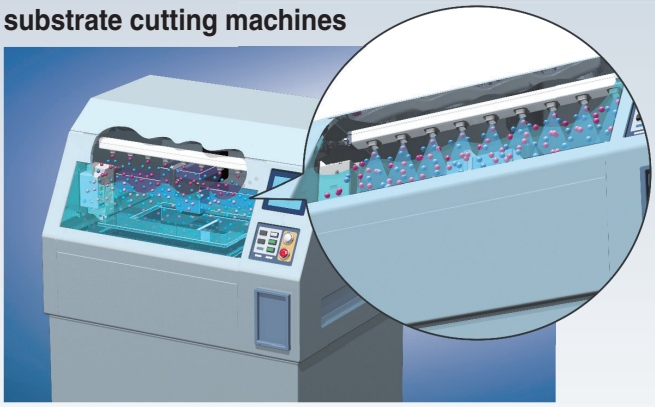

For the static neutralisation of packing films

- Prevents the filled substances from adhering to packing films
- Reduces packing mistakes

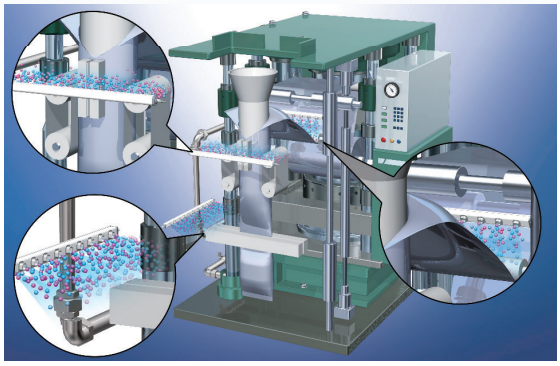

For the static neutralisation during wafer transfer

- Prevents breakage due to discharge between wafers and hands

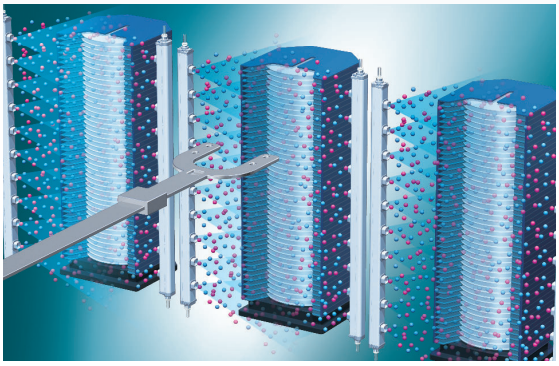

For the static neutralisation of glass substrates

- Prevents the breakage of glass substrates by the static electricity generated when the substrate is lifted from the surface plate

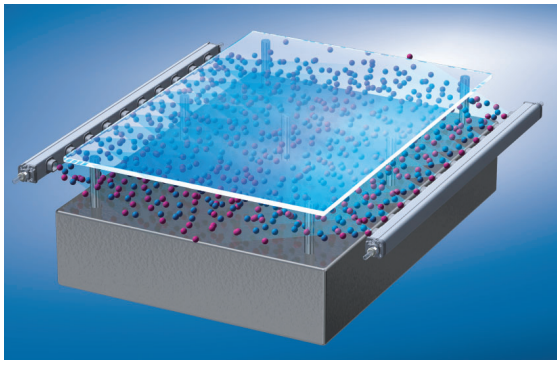

For the static neutralisation of lenses

- Removes dust from lenses
- Prevents the adhesion of dust

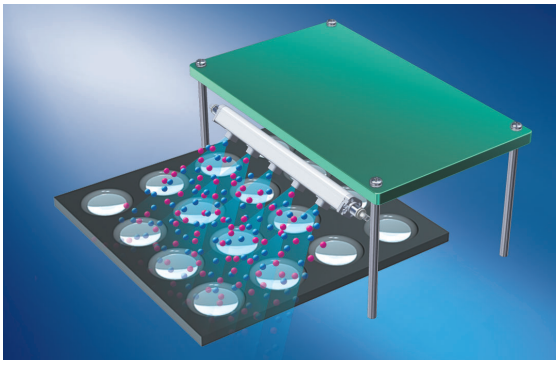

<Application Examples: Nozzle Type>

For the static neutralisation of caps

• Removes dust from caps and prevents the adhesion of dust

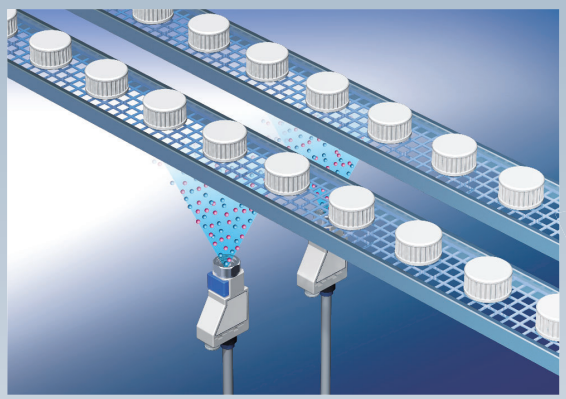

For the static neutralisation of films

• Prevents the adhesion of dust
• Prevents winding failure due to wrinkles, etc.

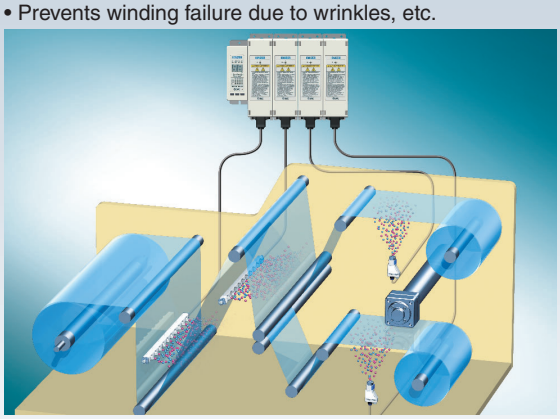

For spot type static neutralisation

• Prevents the electrostatic breakdown of electric parts
• Prevents detachment failure

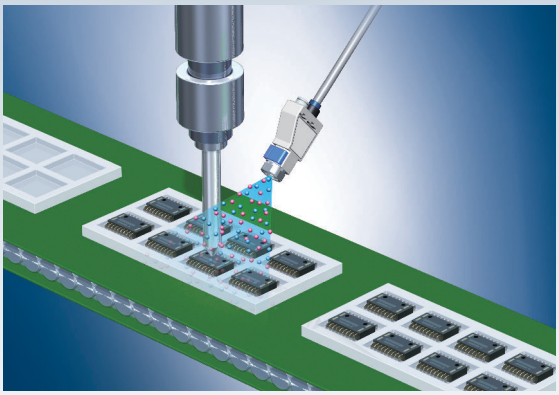

For the static neutralisation of parts feeders

• Prevents the clogging of parts feeders

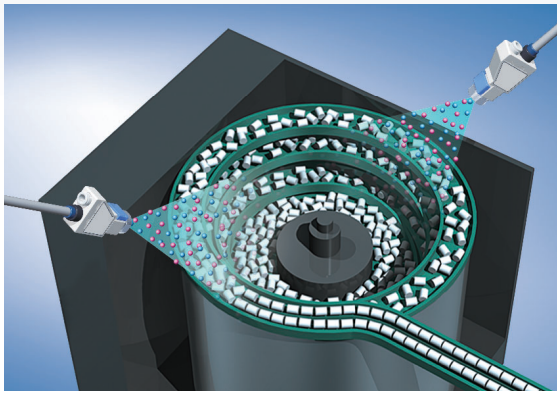

For the static neutralisation of electric substrates

• Prevents the electrostatic breakdown of electric parts

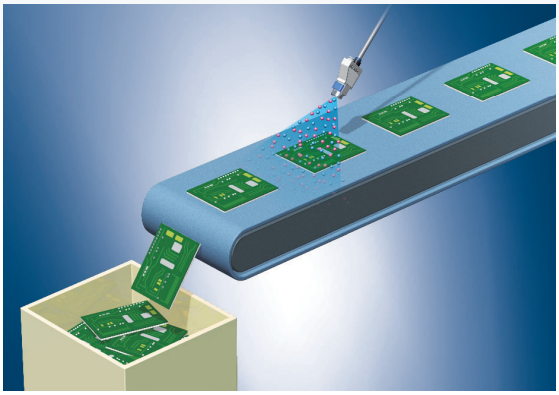

For the removal of dust when detaching from film

• Removes dust generated by static electricity when detaching from film

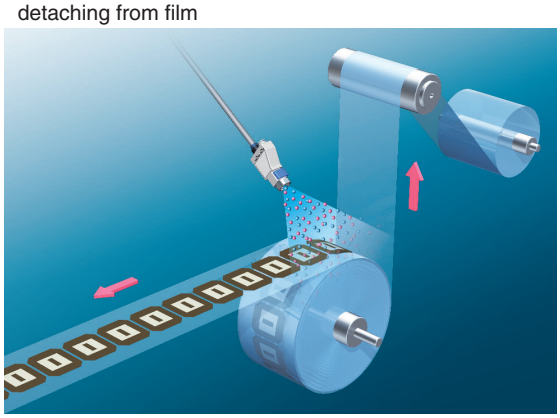

For the prevention of punching press sticking

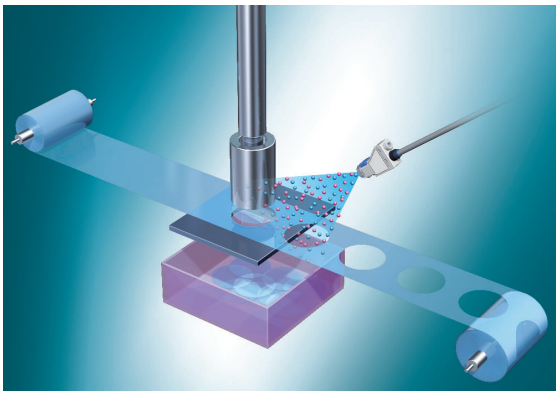

CONTENTS

Separate Controller Bar Type/Nozzle Type Ionizer
IZT40/41(-L)/42(-L)/43(-L) Series

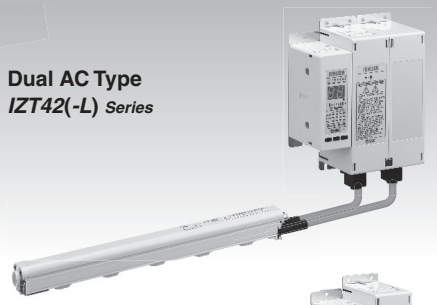

Dual AC Type
IZT42(-L) Series

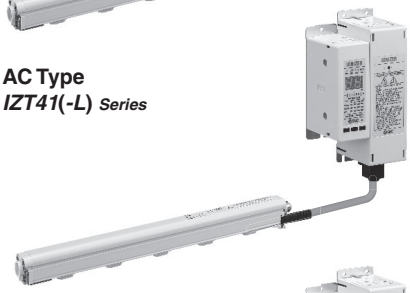

AC Type
IZT41(-L) Series

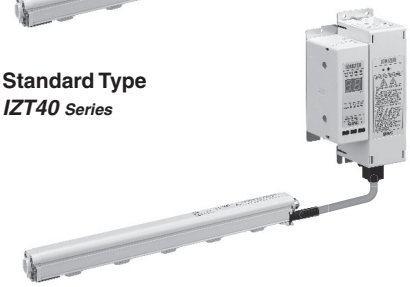

Standard Type
IZT40 Series

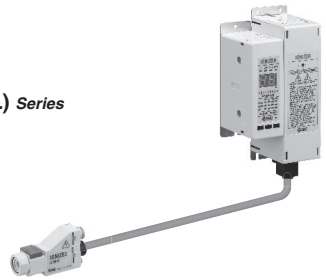

AC Type
IZT43(-L) Series

Separate Controller

Bar Type Ionizer IZT40/41(-L)/42(-L) Series

Technical Data: Static Neutralisation Characteristics
① Installation Distance and Discharge Time ..... p. 15
② Static Neutralisation Range ..... p. 16
③ Potential Amplitude ..... p. 19
④ Pressure — Flow Rate Characteristics ..... p. 20
How to Order
Bar + High Voltage Power Supply Module + Controller ..... p. 21
For Individual Parts (Bar/High Voltage Power Supply Module/Controller) ..... p. 23
Made to Order ..... p. 25
Specifications ..... p. 26
Construction ..... p. 28
Accessories (for Individual Parts) ..... p. 29
Accessories Sold Separately ..... p. 30
Wiring: IZT40, 41(-L), 42(-L) ..... p. 31
Wiring Circuit: IZT40 ..... p. 31
Wiring Circuit: IZT41, 42 ..... p. 32
Wiring Circuit: IZT41-L, 42-L ..... p. 33
Dimensions
IZT40, 41(-L) ..... p. 34
IZT42(-L) ..... p. 36
Controller ..... p. 37
High Voltage Power Supply Module ..... p. 39
Cable ..... p. 41

Separate Controller

Nozzle Type Ionizer IZT43(-L) Series

Technical Data: Static Neutralisation Characteristics
① Installation Distance and Discharge Time ..... p. 45
② Static Neutralisation Range ..... p. 45
③ Pressure — Flow Rate Characteristics ..... p. 46
How to Order
Nozzle + High Voltage Power Supply Module + Controller ..... p. 47
For Individual Parts (Nozzle/High Voltage Power Supply Module/Controller) ..... p. 48
Specifications ..... p. 49
Construction ..... p. 50
Accessories (for Individual Parts) ..... p. 51
Accessories Sold Separately ..... p. 52
Wiring: IZT43(-L) ..... p. 53
Wiring Circuit: IZT43-L ..... p. 53
Wiring Circuit: IZT43 ..... p. 54
Dimensions
IZT43(-L) ..... p. 55
Controller ..... p. 57
High Voltage Power Supply Module ..... p. 59
Cable ..... p. 60

Glossary ..... p. 63
Specific Product Precautions ..... p. 64

Technical Data

Static Neutralisation Characteristics

＊ Static neutralisation characteristics are based on data using a charged plate (dimensions: 150 mm x 150 mm, capacitance: 20 pF) as defined in the U.S. ANSI standards (ANSI/ESD STM3.1-2015). Use this data only as a guideline for model selection because the values vary depending on the material and/or size of the subject.

① Installation Distance and Discharge Time (Discharge Time from 1000 V to 100 V)

IZT40, 41 AC Mode | **IZT42 Dual AC Mode**

For cartridges without air purge

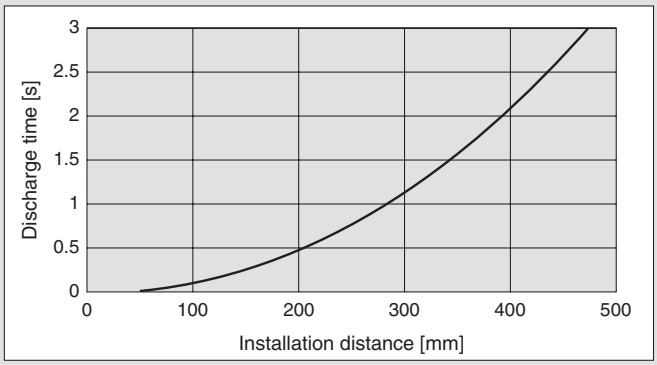

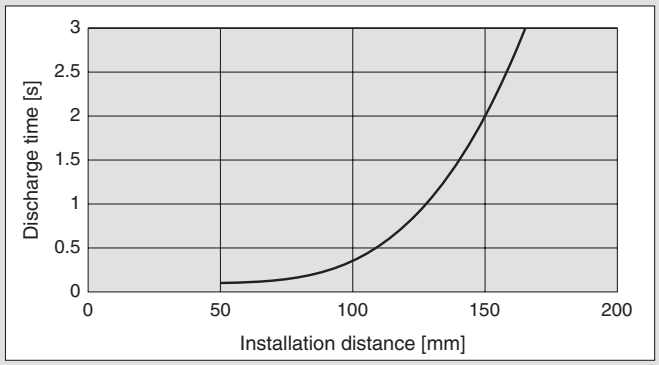

High speed static neutralisation cartridge

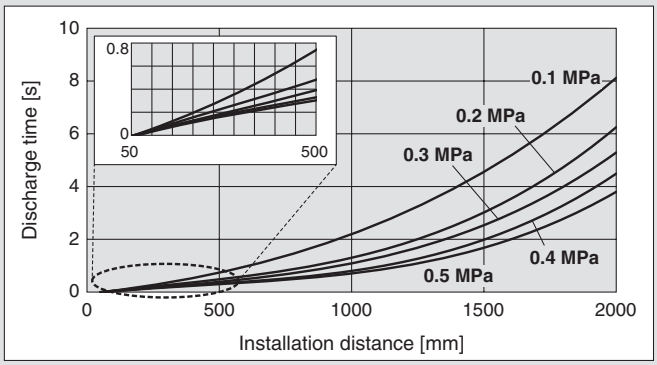

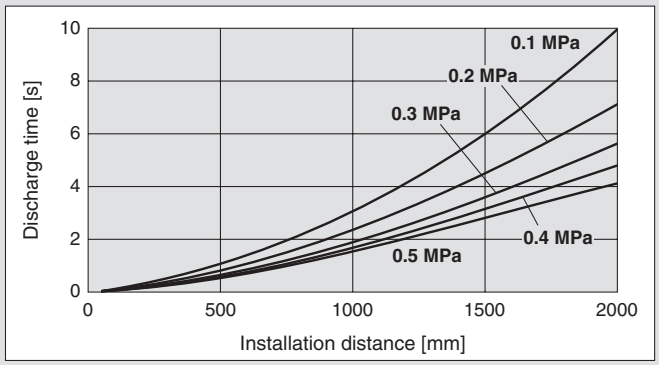

Energy saving static neutralisation cartridge

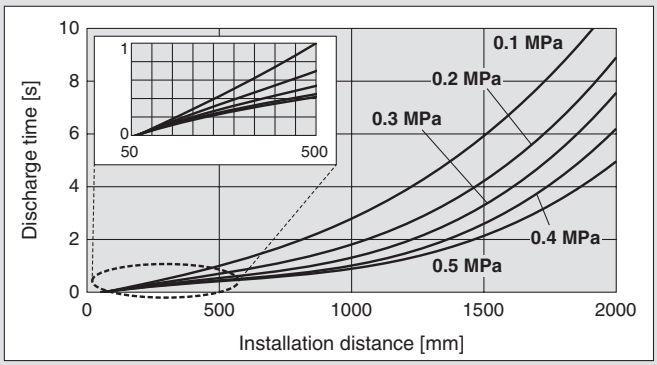

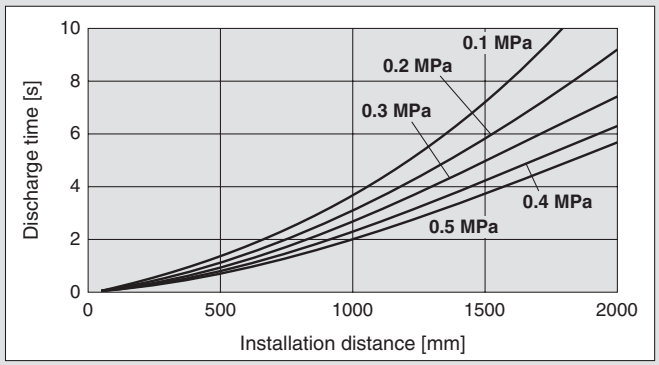

Energy saving high-efficiency cartridge

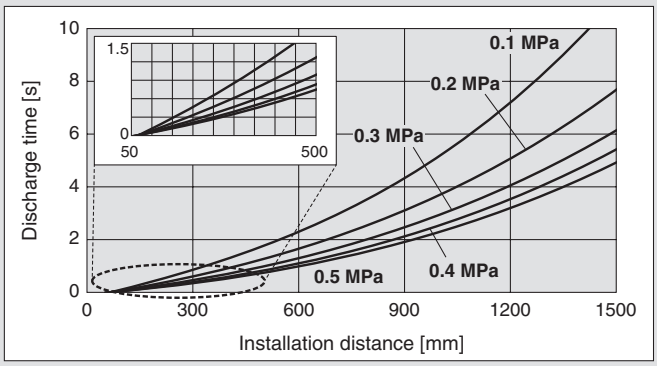

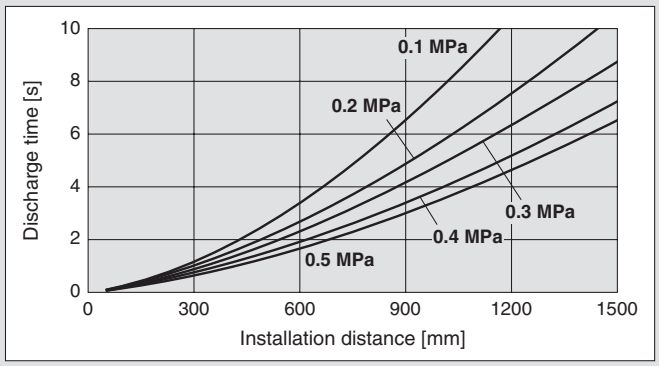

Static Neutralisation Characteristics

＊ Static neutralisation characteristics are based on data using a charged plate (dimensions: 150 mm x 150 mm, capacitance: 20 pF) as defined in the U.S. ANSI standards (ANSI/ESD STM3.1-2015). Use this data only as a guideline for model selection because the values vary depending on the material and/or size of the subject.

②Static Neutralisation Range (Discharge Time from 1000 V to 100 V)

IZT40, 41 Ion Generation Frequency: 30 Hz

1) For cartridges without air purge

For IZT40-□D, L, V
For IZT41-□D, L, V

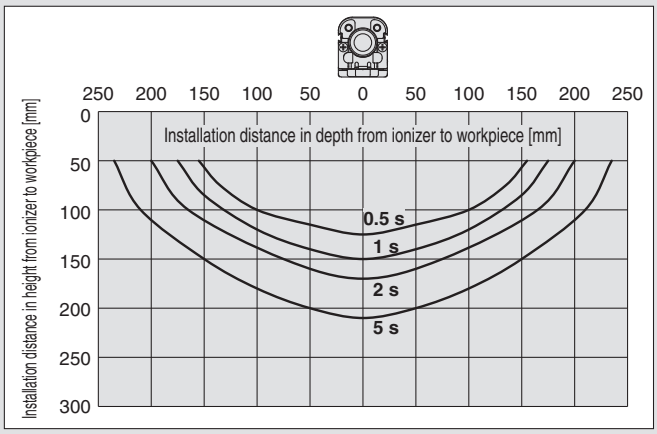

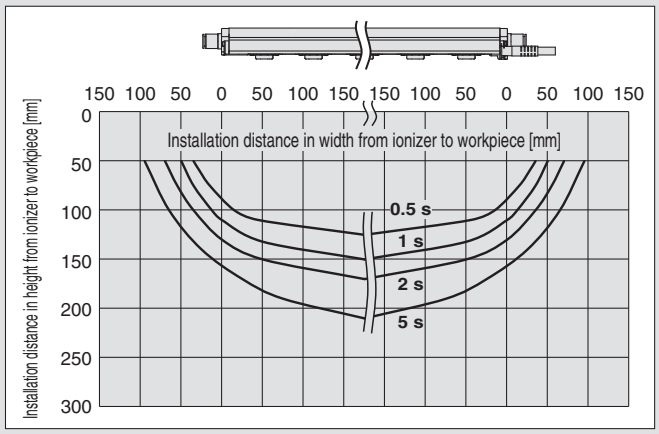

2) High speed static neutralisation cartridge, Supply pressure: 0.3 MPa

For IZT40-□D
For IZT41-□D

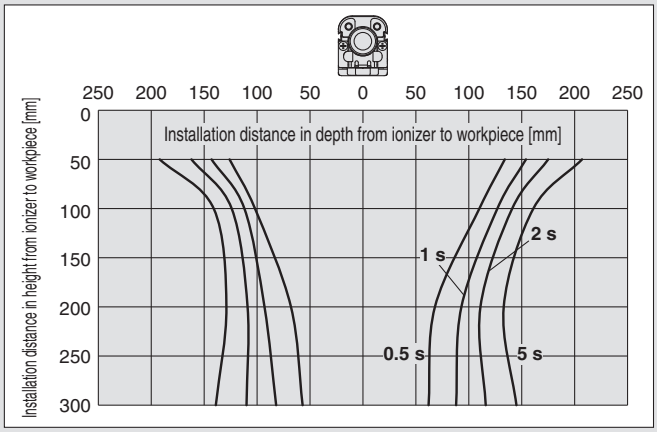

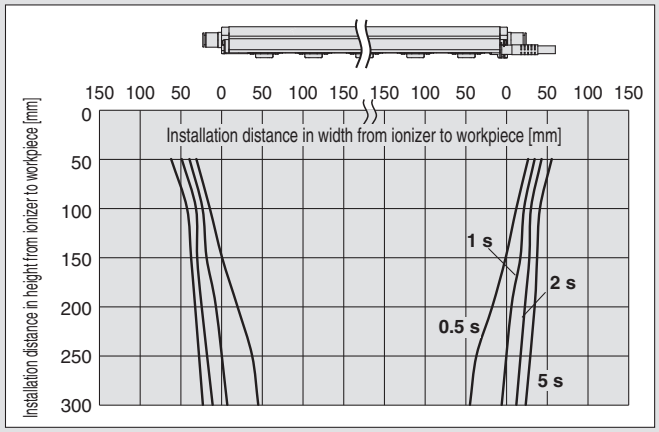

3) Energy saving static neutralisation cartridge, Supply pressure: 0.3 MPa

For IZT40-□L
For IZT41-□L

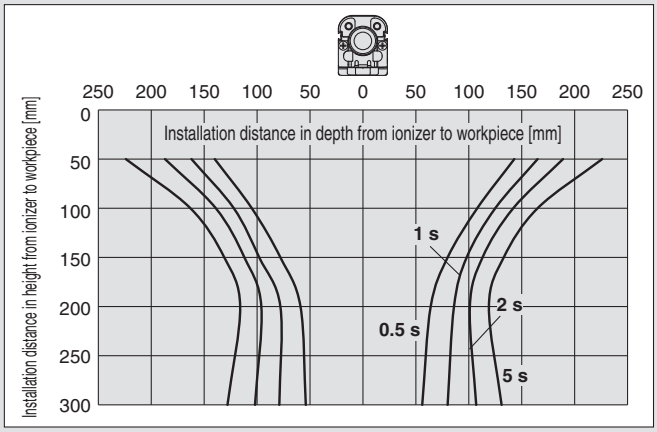

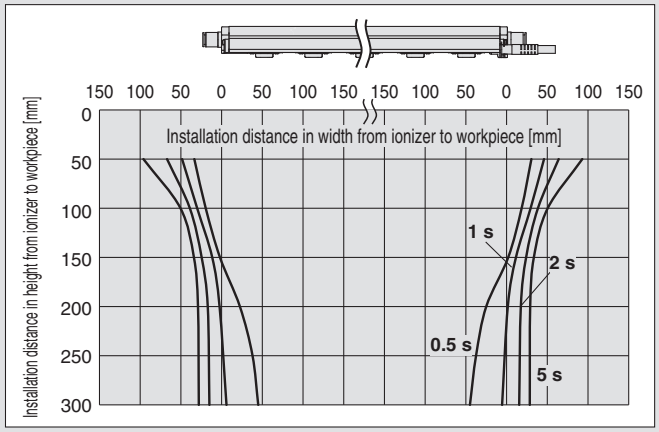

Static Neutralisation Characteristics

＊ Static neutralisation characteristics are based on data using a charged plate (dimensions: 150 mm x 150 mm, capacitance: 20 pF) as defined in the U.S. ANSI standards (ANSI/ESD STM3.1-2015). Use this data only as a guideline for model selection because the values vary depending on the material and/or size of the subject.

②Static Neutralisation Range (Discharge Time from 1000 V to 100 V)

IZT40, 41 Ion Generation Frequency: 30 Hz

4) Energy saving high-efficiency cartridge, Supply pressure: 0.3 MPa

For IZT40-□V
For IZT41-□V

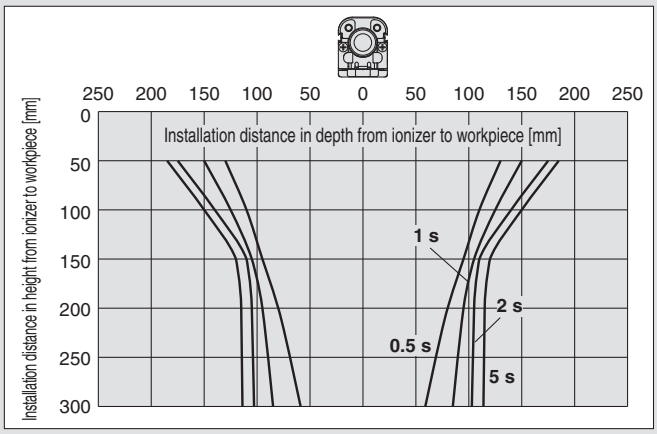

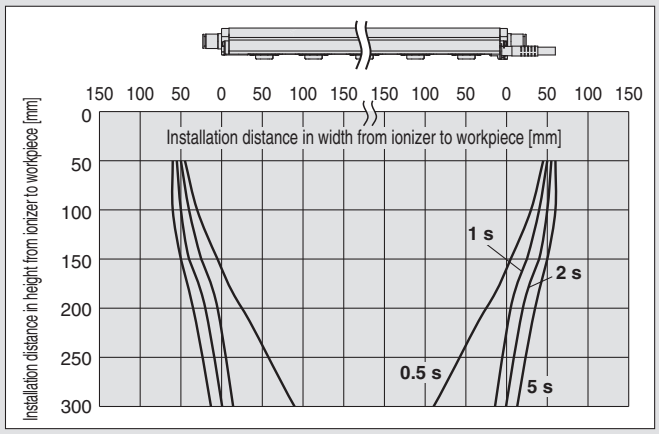

IZT42 Ion Generation Frequency: 30 Hz

1) For cartridges without air purge

For IZT42-□D, L, V

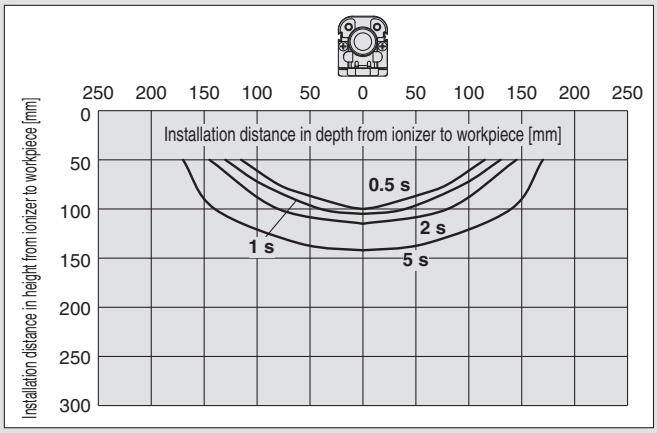

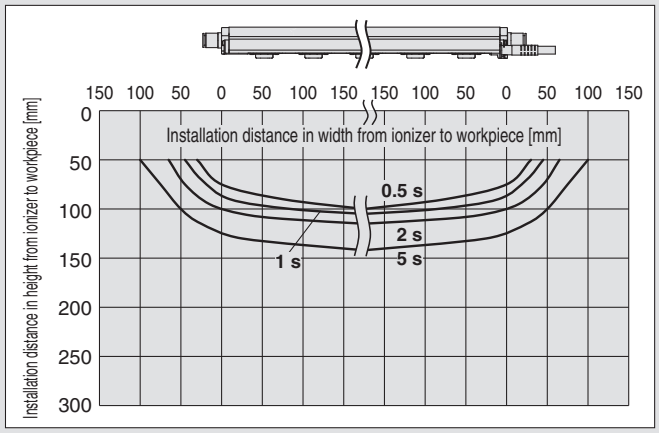

2) High speed static neutralisation cartridge, Supply pressure: 0.3 MPa

For IZT42-□D

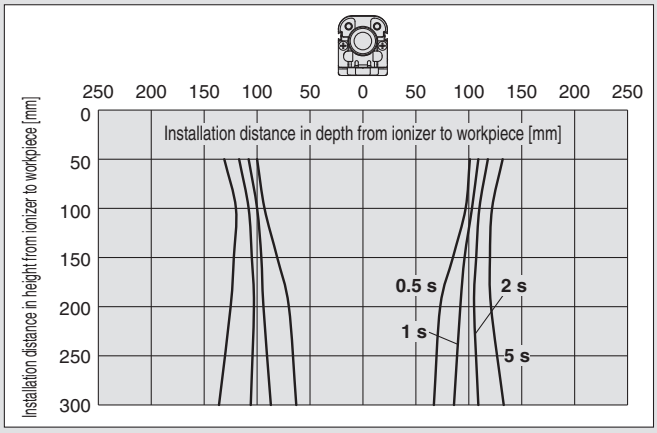

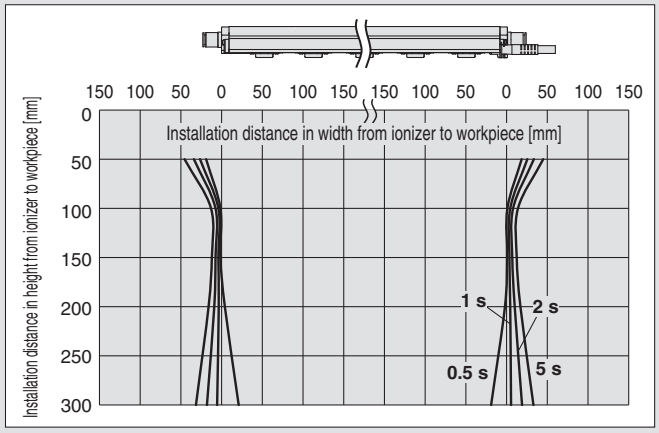

Static Neutralisation Characteristics

＊ Static neutralisation characteristics are based on data using a charged plate (dimensions: 150 mm x 150 mm, capacitance: 20 pF) as defined in the U.S. ANSI standards (ANSI/ESD STM3.1-2015). Use this data only as a guideline for model selection because the values vary depending on the material and/or size of the subject.

②Static Neutralisation Range (Discharge Time from 1000 V to 100 V)

IZT42 Ion Generation Frequency: 30 Hz

3) Energy saving static neutralisation cartridge, Supply pressure: 0.3 MPa

For IZT42-□L

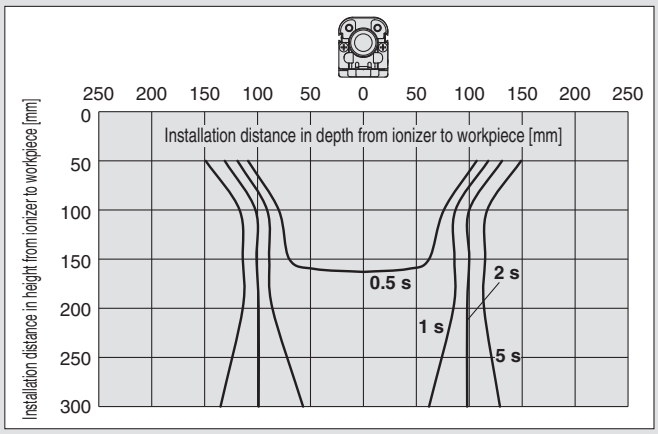

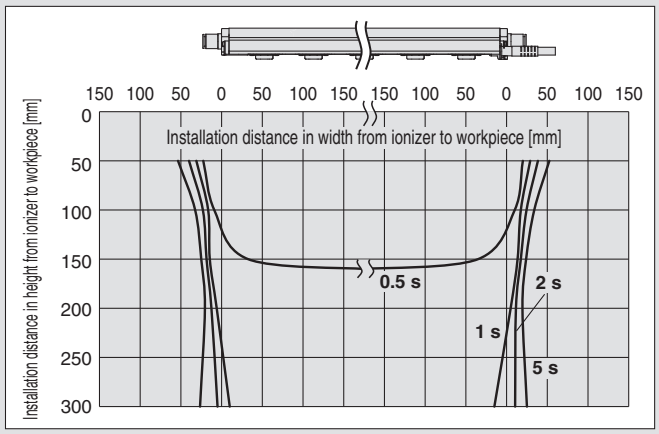

4) Energy saving high-efficiency cartridge, Supply pressure: 0.3 MPa

For IZT42-□V

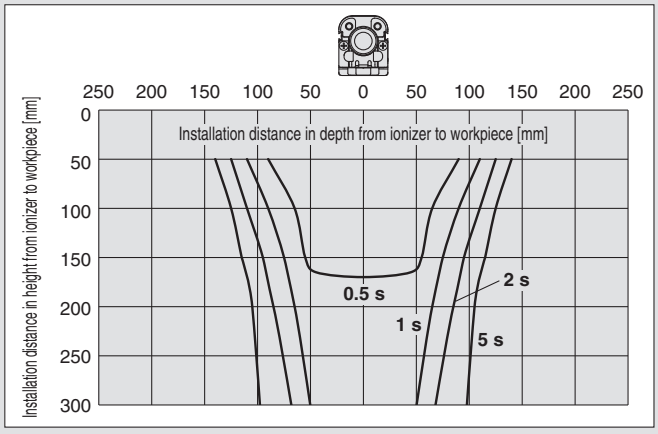

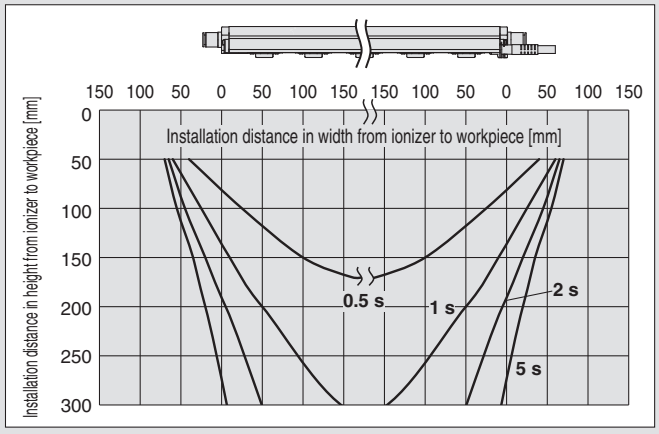

Static Neutralisation Characteristics

* Static neutralisation characteristics are based on data using a charged plate (dimensions: 150 mm x 150 mm, capacitance: 20 pF) as defined in the U.S. ANSI standards (ANSI/ESD STM3.1-2015). Use this data only as a guideline for model selection because the values vary depending on the material and/or size of the subject.

③ Potential Amplitude

IZT40, 41 Supply Pressure: 0.3 MPa

IZT42 Supply Pressure: 0.3 MPa

High speed static neutralisation cartridge

For IZT40-112D
For IZT41-112D

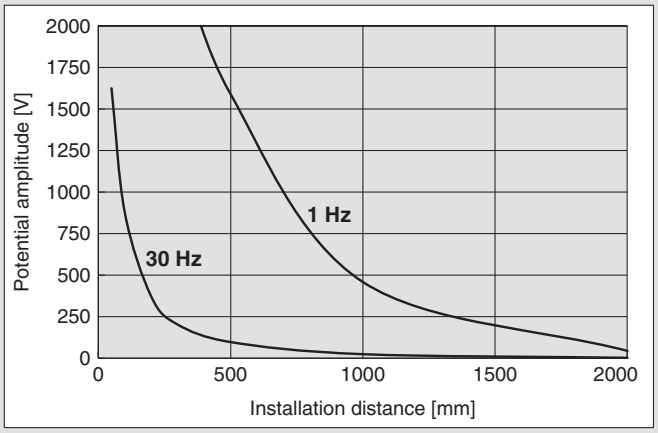

For IZT42-112D

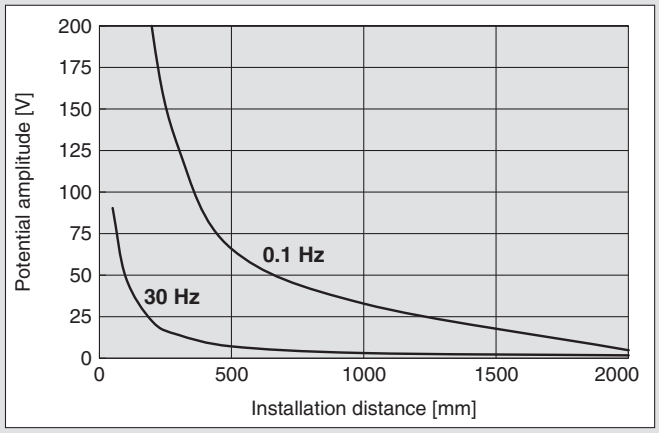

Energy saving static neutralisation cartridge

For IZT40-112L
For IZT41-112L

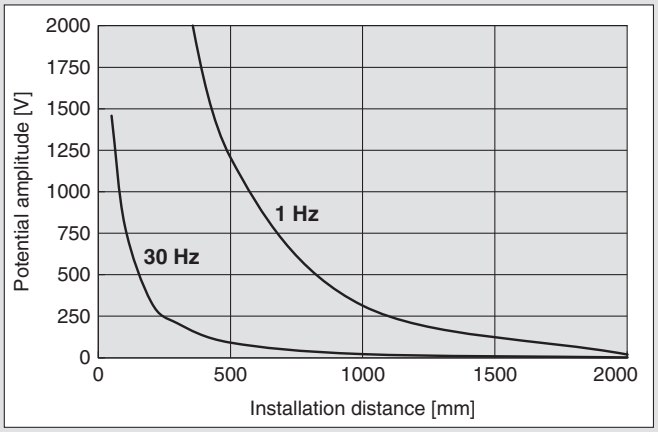

For IZT42-112L

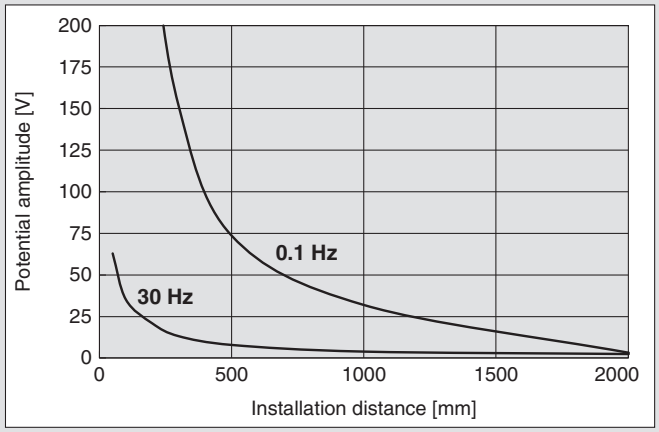

Energy saving high-efficiency cartridge

For IZT40-112V
For IZT41-112V

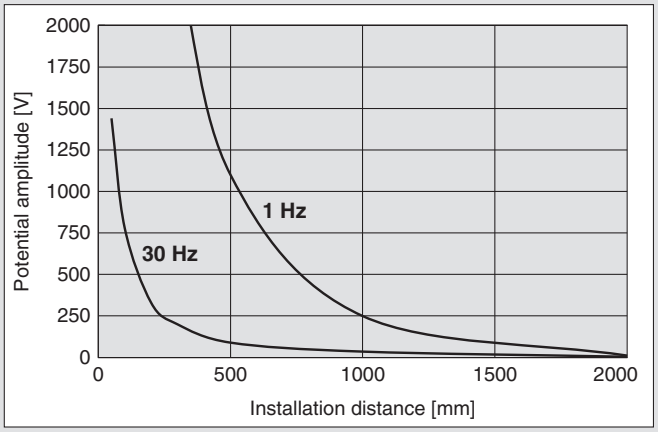

For IZT42-112V

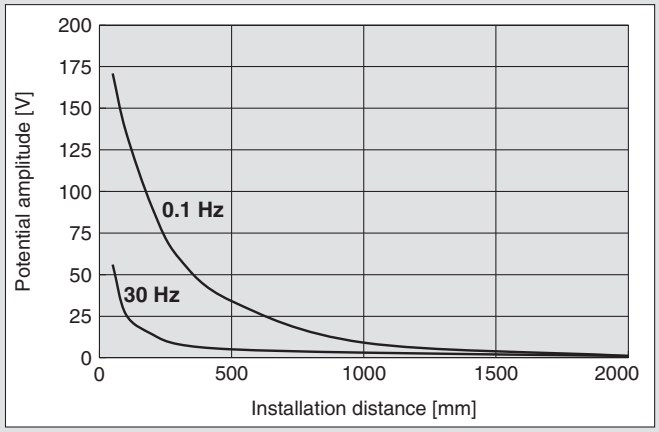

Static Neutralisation Characteristics

* Static neutralisation characteristics are based on data using a charged plate (dimensions: 150 mm x 150 mm, capacitance: 20 pF) as defined in the U.S. ANSI standards (ANSI/ESD STM3.1-2015). Use this data only as a guideline for model selection because the values vary depending on the material and/or size of the subject.

④ Pressure — Flow Rate Characteristics

High speed static neutralisation cartridge

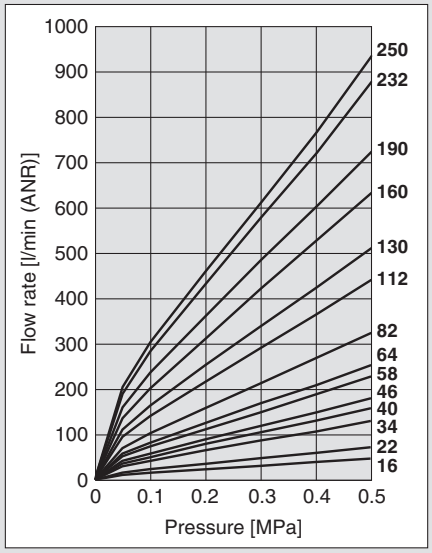

Energy saving static neutralisation cartridge

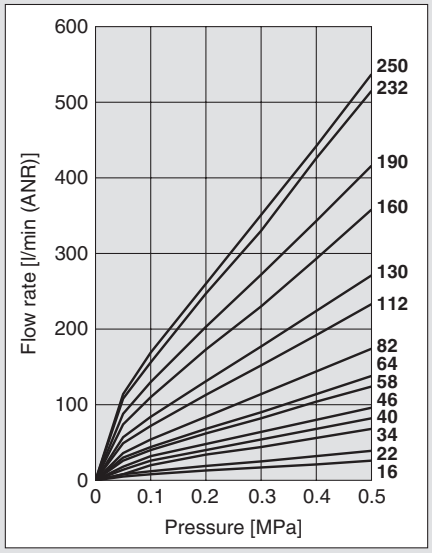

Energy saving high-efficiency cartridge

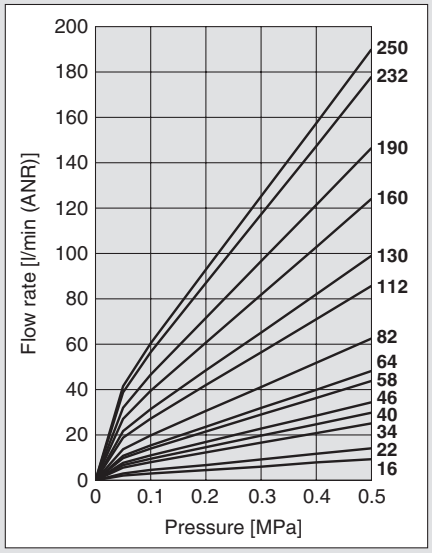

How to measure

a) Air supply from one side

IZT40 / IZT41 / IZT42 -16, 22, 34, 40, 46, 58 Connecting tube: O.D. Ø 6 x I.D. Ø 4

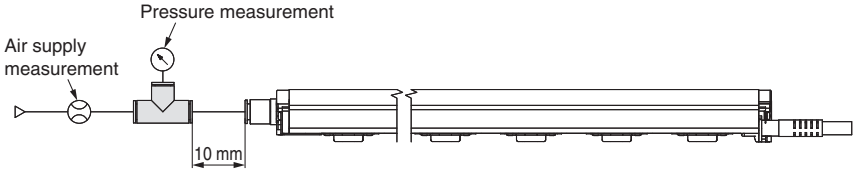

b) Air supply from both sides

IZT40 / IZT41 / IZT42 -64, 82, 112 Connecting tube: O.D. Ø 6 x I.D. Ø 4

IZT40 / IZT41 / IZT42 -130, 160, 190 Connecting tube: O.D. Ø 8 x I.D. Ø 5

IZT40 / IZT41 / IZT42 -232, 250 Connecting tube: O.D. Ø 10 x I.D. Ø 6.5

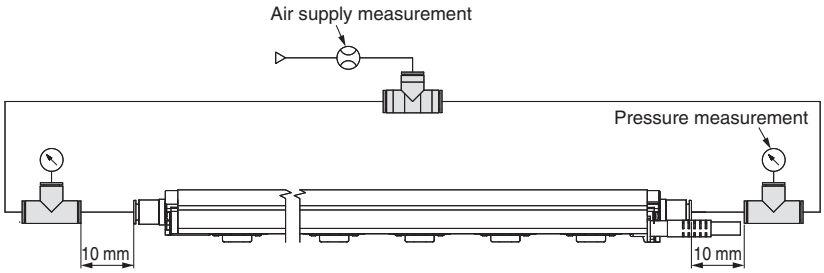

CE RoHS

Separate Controller Bar Type Ionizer

IZT40/41(-L)/42(-L) Series

How to Order

Bar + High voltage power supply module + Controller

Transistor input/output

IZT ❶40 – ❸34 ❹D ❺1 ❻6H ❼R – ❾3 F U –

IZT ❷41 – ❸34 ❹D ❺1 ❻6H ❼R ❽ – ❾3 F U –

IO-Link

IZT ❷41 – ❸34 ❹D ❺1 ❻6H ❼R L – ❿T ⓫R ⓬F ⓭U – ⓮

❶ Model

Symbol	Model
40	Standard type

❷ Model

Symbol	Model
41	AC type
42	Dual AC type

❸ Bar length

Symbol	Length [mm]	Symbol	Length [mm]
16	160	82	820
22	220	112	1120
34	340	130	1300
40	400	160	1600
46	460	190	1900
58	580	232	2320
64	640	250	2500

❹ Emitter cartridge type/ Emitter material

Symbol	Type	Material
D	High speed static neutralisation cartridge	Tungsten
E		Silicon
L	Energy saving static neutralisation cartridge	Tungsten
M		Silicon
V	Energy saving high-efficiency cartridge	Tungsten
S		Silicon

❺ High voltage cable length

Symbol	High voltage cable length [m]
1	1
2	2
3	3

∗ The number of included high voltage cable holders differs depending on the high voltage cable length. (Refer to the table below.)

Number of included high voltage cable holders

⇨ Refer to page 29.

Symbol	IZT40		IZT41		IZT42	
	Straight	Elbow	Straight	Elbow	Straight	Elbow
1	1	1	1	1	2	2
2	2	1	2	1	4	2
3	3	1	3	1	6	2

❻ One-touch fitting

Symbol	Metric size
4H	Ø 4 Straight
6H	Ø 6 Straight
8H	Ø 8 Straight
AH	Ø 10 Straight
4L	Ø 4 Elbow
6L	Ø 6 Elbow
8L	Ø 8 Elbow
AL	Ø 10 Elbow

Symbol	Inch size
5H	Ø 3/16" Straight
7H	Ø 1/4" Straight
9H	Ø 5/16" Straight
BH	Ø 3/8" Straight
5L	Ø 3/16" Elbow
7L	Ø 1/4" Elbow
9L	Ø 5/16" Elbow
BL	Ø 3/8" Elbow

∗ Refer to the recommended piping port size on the next page for selecting a One-touch fitting.

❼ Plug position

Symbol	Plug position
—	Without plug
Q	High voltage cable side
R	Opposite side of the high voltage cable

❽ Input/Output

Symbol	Input/Output
—	NPN
P	PNP

∗ The input/output function cannot be used when the AC adapter is being used.

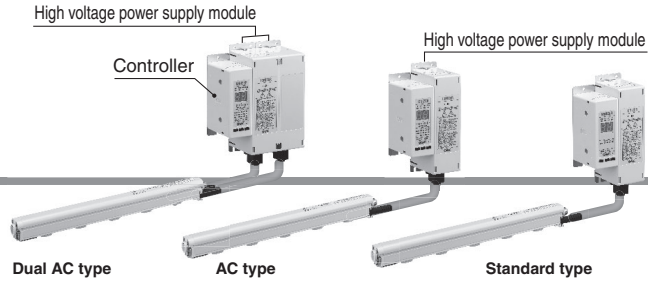

❾ Power supply cable length

Symbol	Length [m]
3	3
5	5
10	10
15	15
N	None

∗ To use an AC adapter, specify "N", and select the AC adapter sold separately.

❿ Power supply cable entry direction/length

Symbol	Entry direction	Length [m]
N	None	
J	Straight	3
K		5
M		10
S	Angled	3
T		5
Z		10

⓫ Communication cable entry direction/length

Symbol	Entry direction	Length [m]
N	None	
E	Straight	0.5
G		1
H		2
J		3
K		5
M		10
P	Angled	0.5
Q		1
R		2
S		3
T		5
Z		10

⓬ Bar bracket ⇨ Refer to page 29.

Symbol	Type
—	Without bracket
B	With bracket 1
F	With bracket 2

∗ The number of intermediate brackets differs depending on the bar length. (Refer to the table below.)

Number of brackets

Bar length [mm]	End bracket	Intermediate bracket
160 to 760	2	None
820 to 1600		1
1660 to 2380		2
2440 to 2500		3

⓭ DIN rail mounting bracket for controller and high voltage power supply module

⇨ Refer to page 29.

Symbol	For controller	For high voltage power supply module
—	None	None
U	Included	Included
W	Included	None
Y	None	Included

⓮ Made to order ⇨ Refer to page 25.

Symbol	Description
-X10	Non-standard bar length
-X14	Model with drop prevention cover

Recommended piping port size for the IZT4□
High speed static neutralisation cartridge

One-touch fitting symbol	Applicable tubing O.D. [mm]	Bar length [mm]													
		160	220	340	400	460	580	640	820	1120	1300	1600	1900	2320	2500
4H/4L	Ø 4	○	○	●	●	●	—	—	—	—	—	—	—	—	—
6H/6L	Ø 6	○	○	○	○	○	○	●	●	●	—	—	—	—	—
8H/8L	Ø 8	○	○	○	○	○	○	○	○	●	●	●	●	—	—
AH/AL	Ø 10	○	○	○	○	○	○	○	○	○	○	○	●	●	●
5H/5L	Ø 3/16"	○	○	○	○	●	●	●	—	—	—	—	—	—	—
7H/7L	Ø 1/4"	○	○	○	○	○	○	○	●	●	●	—	—	—	—
9H/9L	Ø 5/16"	○	○	○	○	○	○	○	○	●	●	●	●	—	—
BH/BL	Ø 3/8"	○	○	○	○	○	○	○	○	○	○	○	●	●	●

○: With piping only on one side ●: With piping on both sides —: Unrecommended piping

Energy saving static neutralisation cartridge

One-touch fitting symbol	Applicable tubing O.D. [mm]	Bar length [mm]													
		160	220	340	400	460	580	640	820	1120	1300	1600	1900	2320	2500
4H/4L	Ø 4	○	○	○	○	○	●	●	●	—	—	—	—	—	—
6H/6L	Ø 6	○	○	○	○	○	○	○	○	○	●	●	●	●	—
8H/8L	Ø 8	○	○	○	○	○	○	○	○	○	○	○	○	●	●
AH/AL	Ø 10	○	○	○	○	○	○	○	○	○	○	○	○	○	○
5H/5L	Ø 3/16"	○	○	○	○	○	○	○	●	●	●	—	—	—	—
7H/7L	Ø 1/4"	○	○	○	○	○	○	○	○	○	○	●	●	●	●
9H/9L	Ø 5/16"	○	○	○	○	○	○	○	○	○	○	○	○	●	●
BH/BL	Ø 3/8"	○	○	○	○	○	○	○	○	○	○	○	○	○	○

○: With piping only on one side ●: With piping on both sides —: Unrecommended piping

Energy saving high-efficiency cartridge

One-touch fitting symbol	Applicable tubing O.D. [mm]	Bar length [mm]													
		160	220	340	400	460	580	640	820	1120	1300	1600	1900	2320	2500
4H/4L	Ø 4	○	○	○	○	○	○	○	○	○	○	○	●	●	●
6H/6L	Ø 6	○	○	○	○	○	○	○	○	○	○	○	○	○	○
8H/8L	Ø 8	○	○	○	○	○	○	○	○	○	○	○	○	○	○
AH/AL	Ø 10	○	○	○	○	○	○	○	○	○	○	○	○	○	○
5H/5L	Ø 3/16"	○	○	○	○	○	○	○	○	○	○	○	○	○	○
7H/7L	Ø 1/4"	○	○	○	○	○	○	○	○	○	○	○	○	○	○
9H/9L	Ø 5/16"	○	○	○	○	○	○	○	○	○	○	○	○	○	○
BH/BL	Ø 3/8"	○	○	○	○	○	○	○	○	○	○	○	○	○	○

○: With piping only on one side ●: With piping on both sides

For Individual Parts

How to Order

Bar IZTB 40 – 16 D 1 6H R – F – X10

❶ ❷ ❸ ❹ ❺ ❻ ❼ ❽

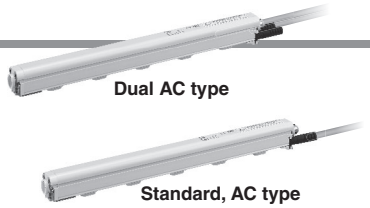

❶ Model

Symbol	Model
40	Standard type (For IZT40), AC type (For IZT41)
42	Dual AC type (For IZT42)

❷ Bar length

Symbol	Length [mm]	Symbol	Length [mm]
16	160	82	820
22	220	112	1120
34	340	130	1300
40	400	160	1600
46	460	190	1900
58	580	232	2320
64	640	250	2500

❸ Emitter cartridge type

Symbol	Type	Material
D	High speed static neutralisation cartridge	Tungsten
E		Silicon
L	Energy saving static neutralisation cartridge	Tungsten
M		Silicon
V	Energy saving high-efficiency cartridge	Tungsten
S		Silicon

❹ High voltage cable length

Symbol	High voltage cable length [m]
1	1
2	2
3	3

∗ The number of included high voltage cable holders differs depending on the high voltage cable length. (Refer to the table below.)

Number of included high voltage cable holders

⇨ Refer to page 29.

Symbol	IZT40		IZT41		IZT42	
	Straight	Elbow	Straight	Elbow	Straight	Elbow
1	1	1	1	1	2	2
2	2	1	2	1	4	2
3	3	1	3	1	6	2

❺ One-touch fitting

Symbol	Metric size
4H	Ø 4 Straight
6H	Ø 6 Straight
8H	Ø 8 Straight
AH	Ø 10 Straight
4L	Ø 4 Elbow
6L	Ø 6 Elbow
8L	Ø 8 Elbow
AL	Ø 10 Elbow

Symbol	Inch size
5H	Ø 3/16" Straight
7H	Ø 1/4" Straight
9H	Ø 5/16" Straight
BH	Ø 3/8" Straight
5L	Ø 3/16" Elbow
7L	Ø 1/4" Elbow
9L	Ø 5/16" Elbow
BL	Ø 3/8" Elbow

∗ Refer to the table below for selecting a One-touch fitting.
∗ The position of the One-touch fitting and the plug cannot be changed after the delivery of the product.

❻ Plug position

Symbol	Position
—	Without plug
Q	High voltage cable side
R	Opposite side of the high voltage cable

❼ Bar bracket

⇨ Refer to page 29.

Symbol	Type
—	Without bracket
B	With bracket 1
F	With bracket 2

∗ The number of intermediate brackets differs depending on the bar length. (Refer to the table below.)

Number of brackets

Bar length	End bracket	Intermediate bracket
160 to 760	2	None
820 to 1600		1
1660 to 2380		2
2440 to 2500		3

❽ Made to order

⇨ Refer to page 25.

Symbol	Description
-X10	Non-standard bar length
-X14	Model with drop prevention cover

Recommended piping port size for the IZT4□

High speed static neutralisation cartridge

One-touch fitting symbol	Applicable tubing O.D.	Bar length [mm]													
		160	220	340	400	460	580	640	820	1120	1300	1600	1900	2320	2500
4H/4L	Ø 4 mm	○	○	●	●	●	—	—	—	—	—	—	—	—	—
6H/6L	Ø 6 mm	○	○	○	○	○	○	●	●	●	—	—	—	—	—
8H/8L	Ø 8 mm	○	○	○	○	○	○	○	○	●	●	●	●	—	—
AH/AL	Ø 10 mm	○	○	○	○	○	○	○	○	○	○	○	●	●	●
5H/5L	Ø 3/16"	○	○	○	○	●	●	●	—	—	—	—	—	—	—
7H/7L	Ø 1/4"	○	○	○	○	○	○	○	●	●	●	—	—	—	—
9H/9L	Ø 5/16"	○	○	○	○	○	○	○	○	●	●	●	●	—	—
BH/BL	Ø 3/8"	○	○	○	○	○	○	○	○	○	○	○	●	●	●

○: With piping only on one side ●: With piping on both sides —: Unrecommended piping

Energy saving static neutralisation cartridge

One-touch fitting symbol	Applicable tubing O.D.	Bar length [mm]													
		160	220	340	400	460	580	640	820	1120	1300	1600	1900	2320	2500
4H/4L	Ø 4 mm	○	○	○	○	○	●	●	●	—	—	—	—	—	—
6H/6L	Ø 6 mm	○	○	○	○	○	○	○	○	○	●	●	●	●	—
8H/8L	Ø 8 mm	○	○	○	○	○	○	○	○	○	○	○	○	●	●
AH/AL	Ø 10 mm	○	○	○	○	○	○	○	○	○	○	○	○	○	○
5H/5L	Ø 3/16"	○	○	○	○	○	○	○	●	●	●	—	—	—	—
7H/7L	Ø 1/4"	○	○	○	○	○	○	○	○	○	○	●	●	●	●
9H/9L	Ø 5/16"	○	○	○	○	○	○	○	○	○	○	○	○	●	●
BH/BL	Ø 3/8"	○	○	○	○	○	○	○	○	○	○	○	○	○	○

○: With piping only on one side ●: With piping on both sides —: Unrecommended piping

Energy saving high-efficiency cartridge

One-touch fitting symbol	Applicable tubing O.D.	Bar length [mm]													
		160	220	340	400	460	580	640	820	1120	1300	1600	1900	2320	2500
4H/4L	Ø 4 mm	○	○	○	○	○	○	○	○	○	○	○	●	●	●
6H/6L	Ø 6 mm	○	○	○	○	○	○	○	○	○	○	○	○	○	○
8H/8L	Ø 8 mm	○	○	○	○	○	○	○	○	○	○	○	○	○	○
AH/AL	Ø 10 mm	○	○	○	○	○	○	○	○	○	○	○	○	○	○
5H/5L	Ø 3/16"	○	○	○	○	○	○	○	○	○	○	○	○	○	○
7H/7L	Ø 1/4"	○	○	○	○	○	○	○	○	○	○	○	○	○	○
9H/9L	Ø 5/16"	○	○	○	○	○	○	○	○	○	○	○	○	○	○
BH/BL	Ø 3/8"	○	○	○	○	○	○	○	○	○	○	○	○	○	○

○: With piping only on one side ●: With piping on both sides

Individual Parts Combinations

	Bar/**IZTB**		High voltage power supply module/**IZTP**			Controller/**IZTC**	
	40	42	40	41	42	40	41
IZT40	●		●			●	
IZT41	●			●			●
IZT42		●			●		●

⚠ Caution

The transistor input/output specification and the IO-Link specification cannot be installed in combination.

Controller

Transistor input/output

IZTC 40 – 3 – W

IZTC 41 – ☐ 3 – W

IO-Link

IZTC 41 – L J G – W

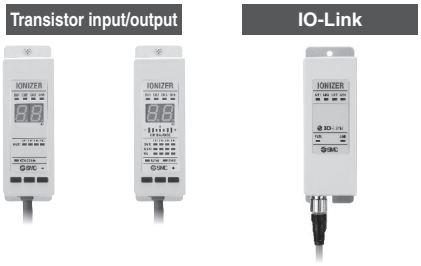

Standard type

AC, Dual AC type

❶ Model

Symbol	Model
40	Standard type

❷ Model

Symbol	Model
41	AC type, Dual AC type

❸ Input/Output

Symbol	Input/Output
—	NPN
P	PNP

❹ Power supply cable length

Symbol	Length [m]
3	3
5	5
10	10
15	15
N	None

❺ Power supply cable entry direction/length

Symbol	Entry direction	Length [m]
N	None	
J	Straight	3
K		5
M		10
S	Angled	3
T		5
Z		10

❻ Communication cable entry direction/length

Symbol	Entry direction	Length [m]
N	None	
E	Straight	0.5
G		1
H		2
J		3
K		5
M		10
P	Angled	0.5
Q		1
R		2
S		3
T		5
Z		10

❼ DIN rail mounting bracket

⇨ Refer to page 29.

Symbol	Type
—	None
W	Included

High voltage power supply module

Transistor input/output

IZTP 41 – Y

IO-Link

IZTP 41 – L – Y

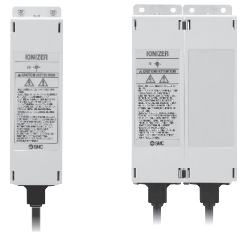

Standard, AC type

Dual AC type

❶ Model

Symbol	Model
40	Standard type (For Bar)
41	AC type (For Bar)
42	Dual AC type (For Bar)
43	AC type (For Nozzle)

❷ Model

Symbol	Model
41	AC type (For Bar)
42	Dual AC type (For Bar)
43	AC type (For Nozzle)

❸ DIN rail mounting bracket

⇨ Refer to page 29.

Symbol	Type
—	None
Y	Included

Made to Order

Symbol	Description	Specifications
-X10	Non-standard bar length	Manufacturable bar length (Symbol): 10 + 6 x n (n: Integer from 1 to 39) (For n = 1, 2, 4, 5, 6, 8, 9, 12, 17, 20, 25, 30, and 37, use a standard model.)

Bar + High voltage power supply module + Controller

	IZT	40	–	52	D	1	6H	R		–			F			–	X10
Transistor input/output	IZT	42	–	52	D	1	6H	R		–			F			–	X10
IO-Link	IZT	42	–	52	D	1	6H	R	L	–			F			–	X10
Bar	IZTB	40	–	52	D	1	6H	R		–			F			–	X10

❶ ❷ ❸

Standard model number ⇨ Refer to pages 21, 22, and 23.

❶ **Type**

41
42

❷ **Type**

40
42

❸ **Bar length**

Symbol	Bar length [mm]	Symbol	Bar length [mm]	Symbol	Bar length [mm]	Symbol	Bar length [mm]
28	280	106	1060	166	1660	214	2140
52	520	118	1180	172	1720	220	2200
70	700	124	1240	178	1780	226	2260
76	760	136	1360	184	1840	238	2380
88	880	142	1420	196	1960	244	2440
94	940	148	1480	202	2020		
100	1000	154	1540	208	2080		

Symbol	Description	Specifications
-X14	Model with emitter cartridge drop prevention cover	The main unit is shipped fitted with a drop prevention cover available as an optional accessory.

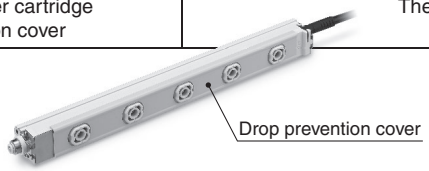

Bar + High voltage power supply module + Controller

	IZT	40	–	34	D	1	6H	R		–			F			–	X14
Transistor input/output	IZT	42	–	34	D	1	6H	R		–			F			–	X14
IO-Link	IZT	42	–	34	D	1	6H	R	L	–			F			–	X14
Bar	IZTB	40	–	34	D	1	6H	R		–			F			–	X14

❶ ❷ ❸

Standard model number ⇨ Refer to pages 21, 22, and 23.

❶ **Type**

41
42

❷ **Type**

40
42

❸ **Bar length**

Standard	Symbol	16	22	34	40	46	58	64	82	112	130	160	190	232	250
	Bar length [mm]	160	220	340	400	460	580	640	820	1120	1300	1600	1900	2320	2500
Non-standard	The bar of non-standard length is available. Refer to the how to order above.														

Specifications

Ionizer Specifications

Ionizer model		IZT40	IZT41(-L)	IZT42(-L)
Ion generation method		Corona discharge type		
Method of applying voltage		AC, DC*1		Dual AC
Applied voltage		±7000 V		±6000 V
Offset voltage*2		Within ±30 V		
Air purge	**Fluid**	Air (Clean, dry air)		
	Operating pressure	0.5 MPa or less		
	Proof pressure	0.7 MPa		
	Connecting tube size (One side can be plugged.)	Metric size: Ø 4, Ø 6, Ø 8, Ø 10 Inch size: Ø 3/16", Ø 1/4", Ø 5/16", Ø 3/8"		
Current consumption		0.7 A or less (+0.6 A or less per ionizer when connected)	0.8 A or less (+0.7 A or less per ionizer when connected)	1.4 A or less (+1.3 A or less per ionizer when connected)
Power supply voltage		24 VDC ±10 %		
Input signal*3	**NPN specification**	—	Connected to DC (–) Voltage range: 5 VDC or less Current consumption: 5 mA or less	
	PNP specification		Connected to DC (+) Voltage range: 19 VDC to power supply voltage Current consumption: 5 mA or less	
Output signal*3	**NPN specification**	—	Max. load current: 100 mA Residual voltage: 1 V or less (Load current at 100 mA) Max. applied voltage: 26.4 VDC	
	PNP specification		Max. load current: 100 mA Residual voltage: 1 V or less (Load current at 100 mA)	
IO-Link device*4		—	Voltage range: 18 to 30 VDC Current consumption: 100 mA or less * For details, refer to the “IO-Link Communication Specifications” table below.	
Function		High voltage abnormality detection (Ion generation stops when an abnormality is detected.)	Auto balance, Maintenance detection, High voltage abnormality detection (Ion generation stops when an abnormality is detected.), and Ion generation stop input	
Effective static neutralisation distance		50 to 2000 mm		
Ambient and fluid temperatures	**Controller, High voltage power supply module**	0 to 40 °C		
	Bar	0 to 50 °C		
Ambient humidity		35 to 80 % Rh (No condensation)		
Material	**Controller**	Cover: ABS, Aluminium, Switch: Silicone rubber*3		
	High voltage power supply module	ABS, Aluminium		
	Bar	Cover: ABS, Emitter cartridge: PBT, Emitter: Tungsten or Single crystal silicon, High voltage cable: Silicone rubber, PVC		
Standards/Directive		CE marking (EMC Directive)		

*1 Apply cathode or anode to DC.
*2 When air purge is performed between a charged object and an ionizer at a distance of 300 mm
*3 For transistor input/output specification products
*4 For IO-Link compatible products

IO-Link Communication Specifications

IO-Link type	Device
IO-Link version	V1.1
Configuration file format	IODD file*1
Communication speed	COM2 (38.4 kbps)
Min. cycle time	8.0 ms
Process data length	Input data: 13 bytes, Output data: 9 bytes
On request data communication	Yes
Data storage function	Yes
Event function	Yes
Vendor ID	131 (0 x 0083)
Device ID	581 (0 x 000245)

*1 The configuration file can be downloaded from the SMC website: https://www.smc.eu

Specifications

Weight

[g]

	Controller	High voltage power supply module
IZT40	210 (230)	680 (690)
IZT41(-L)	210 (230)	680 (690)
IZT42(-L)	210 (230)	1350 (1360)

∗ The values in ( ) are for IO-Link compatible products.

Number of Emitter Cartridges/Bar Weight

[g]

Bar length symbol		16	22	34	40	46	58	64	82	112	130	160	190	232	250
Number of emitter cartridges (pcs.)		2	3	5	6	7	9	10	13	18	21	26	31	38	41
IZT40 IZT41 (Common for bars)	**High voltage cable (1 m)**	360	420	530	590	650	760	820	990	1270	1440	1720	2010	2410	2580
	High voltage cable (2 m)	490	550	660	720	780	890	950	1120	1400	1570	1850	2140	2540	2710
	High voltage cable (3 m)	610	670	780	840	900	1010	1070	1240	1520	1690	1970	2260	2660	2830
IZT42	**High voltage cable (1 m)**	520	580	690	750	810	920	980	1150	1430	1600	1880	2170	2570	2740
	High voltage cable (2 m)	770	830	940	1000	1060	1170	1230	1400	1680	1850	2130	2420	2820	2990
	High voltage cable (3 m)	1010	1070	1180	1240	1300	1410	1470	1640	1920	2090	2370	2660	3060	3230

AC Adapter (Sold Separately) ⇨ Refer to page 30.

Model	**IZT40-CG1, IZT40-CG2**
Input voltage	100 to 240 VAC, 50/60 Hz
Output current	1.9 A
Ambient temperature	0 to 40 °C
Ambient humidity	35 to 65 % Rh (No condensation)
Weight	375 g
Standards/Directive	CE, cUL

Construction

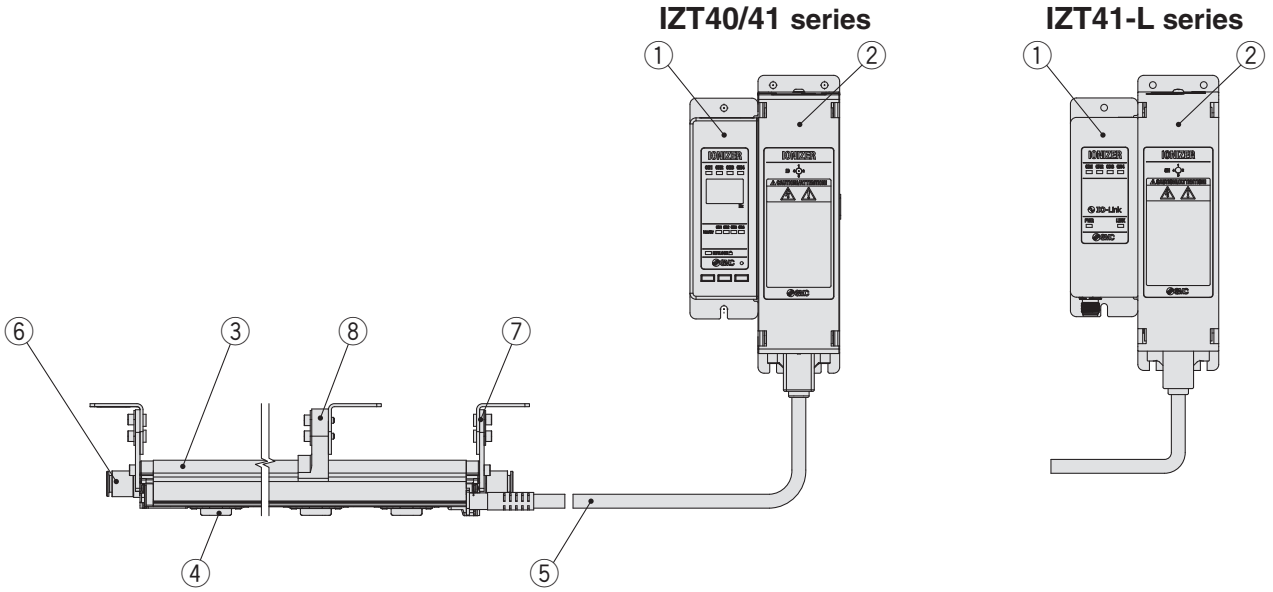

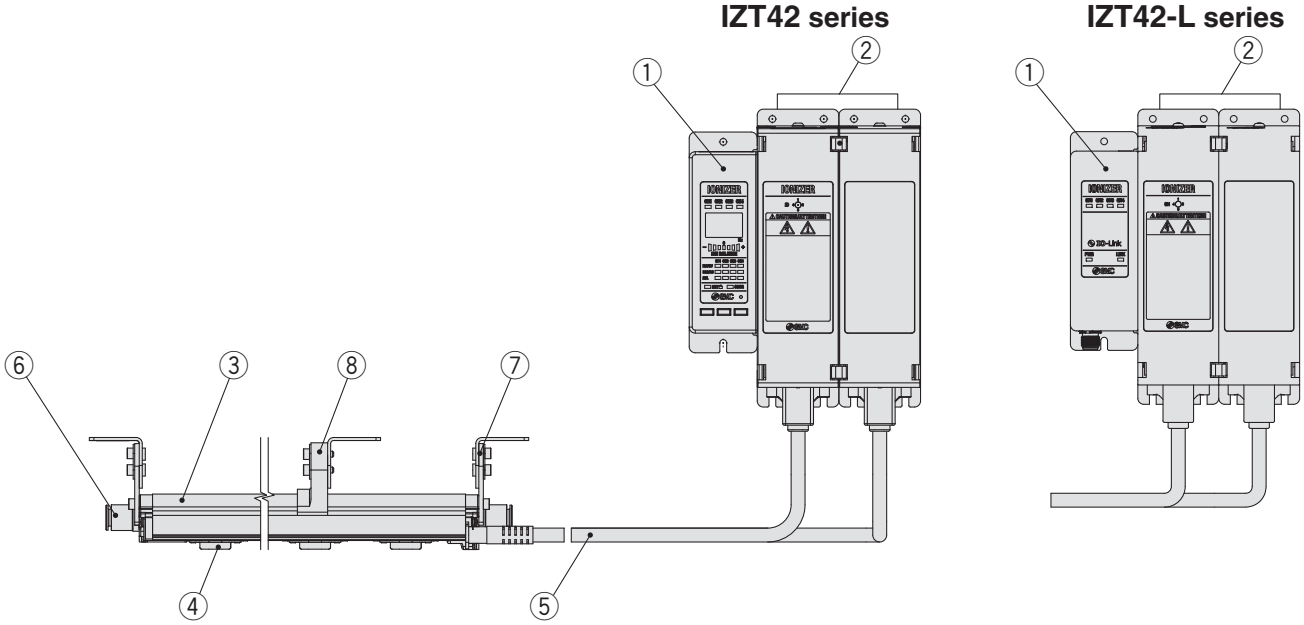

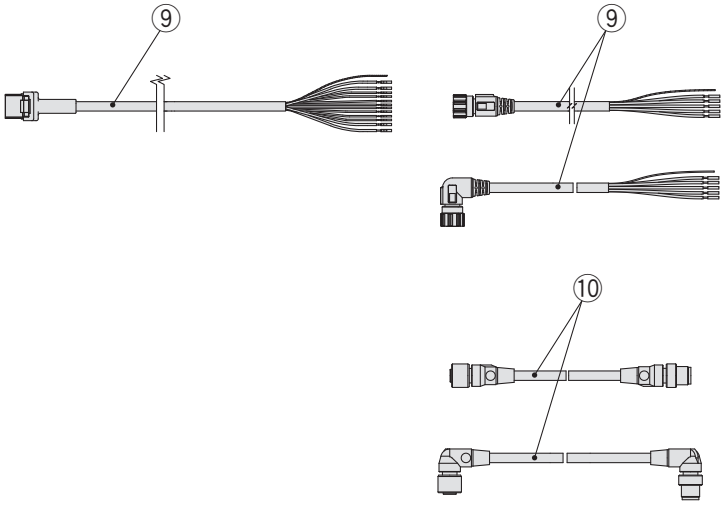

No.	Description
1	**Controller**
2	**High voltage power supply module**
3	**Bar**
4	**Emitter cartridge**
5	**High voltage cable**
6	**One-touch fitting**
7	**End bracket**
8	**Intermediate bracket**
9	**Power supply cable**
10	**Communication cable**

Accessories (for Individual Parts)

Emitter cartridge (For IZT40, 41(-L), 42(-L))

IZT40 − N D

High speed static neutralisation

Energy saving static neutralisation

Emitter cartridge type/Emitter material

Symbol	Type	Material
D	High speed static neutralisation cartridge	Tungsten
E		Silicon
L	Energy saving static neutralisation cartridge	Tungsten
M		Silicon

Cartridge colour	Emitter material
White	Tungsten
Grey	Silicon

IZS40 − N V

Energy saving high-efficiency

Emitter cartridge type/Emitter material

Symbol	Type	Material
V	Energy saving high-efficiency cartridge	Tungsten
S		Silicon

Cartridge colour	Emitter material
White	Tungsten
Grey	Silicon

Bar bracket (For IZT40, 41(-L), 42(-L))

IZT40 − B E1

Bar bracket

Symbol	Type
E1	End bracket 1
E2	End bracket 2
M1	Intermediate bracket 1
M2	Intermediate bracket 2

∗ Refer to the table below for selecting a bracket.

Bracket combinations

	Intermediate bracket 1	Intermediate bracket 2
End bracket 1	○ (Adjustment angle ±90°)	×
End bracket 2	×	○ (Adjustment angle ±15°)

○: Available ×: Not available

∗ The number of intermediate brackets required, as listed below, depends on the bar length. Two end brackets are always required regardless of the bar length.

Number of brackets

Bar length	End bracket	Intermediate bracket
160 to 760	2	None
820 to 1600		1
1660 to 2380		2
2440 to 2500		3

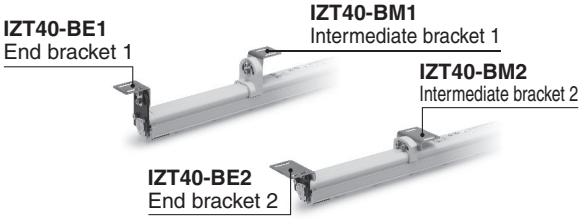

Power supply cable (IZT40, 41, 42)

IZT40 − CP 3

Cable specifications
⇨ Refer to page 41.

Power supply cable length

Symbol	Length [m]
3	3
5	5
10	10
15	15

IO-Link power supply cable (IZT41-L, 42-L)

IZT41 − CP J

Power supply cable entry direction/length

Symbol	Entry direction	Length [m]
J	Straight	3
K		5
M		10
S	Angled	3
T		5
Z		10

IO-Link communication cable (IZT41-L, 42-L)

IZT41 − CE G

Communication cable entry direction/length

Symbol	Entry direction	Length [m]
E	Straight	0.5
G		1
H		2
J		3
K		5
M		10
P	Angled	0.5
Q		1
R		2
S		3
T		5
Z		10

DIN rail mounting bracket for controller and high voltage power supply module

IZT40 − B 1

DIN rail mounting bracket

Symbol	Type
1	For Controller
2	For High voltage power supply module
3	For High voltage power supply module for IZT42

For Controller

IZT40-B1

For High voltage power supply module

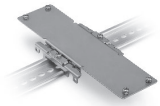

IZT40-B2

For IZTP42

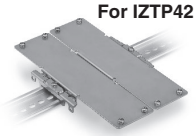

IZT40-B3

High voltage cable holder

IZT40 − E 1

High voltage cable holder

Symbol	Type
1	Straight
2	Elbow

Straight

IZT40-E1

Elbow

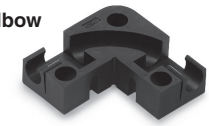

IZT40-E2

Accessories Sold Separately

Drop prevention cover (For IZT40, 41(-L), 42(-L))

IZS40 − E 2

Number of fixed emitter cartridges

Symbol	Type
2	2 pcs.
3	3 pcs.
4	4 pcs.
5	5 pcs.

Standard bar length

Bar length symbol	Number of required drop prevention covers			
	IZS40-E2	IZS40-E3	IZS40-E4	IZS40-E5
16	1	—	—	—
22	—	1	—	—
34	—	—	—	1
40	—	2	—	—
46	—	1	1	—
58	—	—	1	1
64	—	—	—	2
82	—	1	—	2
112	—	1	—	3
130	—	2	—	3
160	—	2	—	4
190	—	2	—	5
232	—	1	—	7
250	—	2	—	7

∗ Please contact SMC for the non-standard bar length.

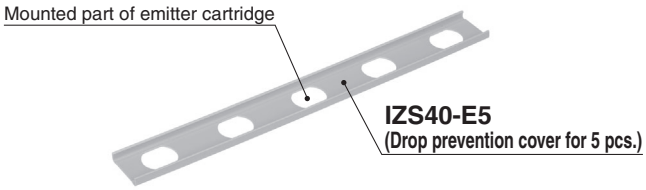

The model number requires the suffix "-X14" to indicate that the body is to be shipped fitted with a drop prevention cover.
⇨ Refer to page 25.

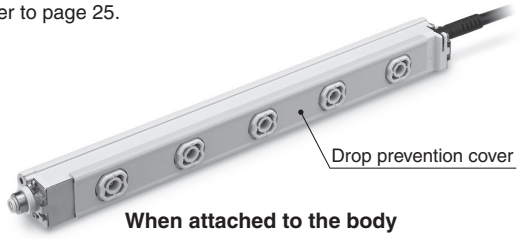

When attached to the body

AC adapter (IZT40, 41, 42)

IZT40 − CG 2EU

AC adapter

Symbol	Type
2EU	With AC cord
2	Without AC cord

∗ External input and output cannot be used when the AC adapter is being used.

AC adapter

Separate cable (IZT40, 41, 42)

IZT40 − CF 1

Cable length

Symbol	Length [m]
1	1
2	2
3	3

Cleaning kit (For IZT40, 41, 42)

IZS30 − M2

Replacement felt pad: IZS30-A0201
Replacement rubber grindstone: IZS30-A0202

Wiring: IZT40, 41(-L), 42(-L)

IZT40

Cable colour	Signal name	Signal direction	Description
Brown	DC (+)	IN	Connect the power supply to operate the product.
Blue	DC (–)	IN	
Green	F.G.	—	Frame ground of the product. Make sure to ground with a resistance value of 100 Ω or less to use it as a reference electric potential of offset voltage. If not grounded, performance cannot be acquired, and also causes failure of the equipment.
Pink	Ion generation stop signal CH1	—	—
Grey	Ion generation stop signal CH2	—	—
Yellow	Ion generation stop signal CH3	—	—
Purple	Ion generation stop signal CH4	—	—
White	Maintenance detection signal	—	—
Black	Error signal	—	—
Orange	Unused	—	—

IZT41, 42

Cable colour	Signal name	Signal direction	Description
Brown	DC (+)	IN	Connect the power supply to operate the product.
Blue	DC (–)	IN	
Green	F.G.	—	Frame ground of the product. Make sure to ground with a resistance value of 100 Ω or less to use it as a reference electric potential of offset voltage. If not grounded, performance cannot be acquired, and also causes failure of the equipment.
Pink	Ion generation stop signal CH1	IN	Signal input to turn ON/OFF ion generation of each bar (CH1 to 4). NPN specification: Stops generating ions by connecting to 0 V. (Starts generating ions when disconnected.) PNP specification: Stops generating ions by connecting to +24 VDC. (Starts generating ions when disconnected.)
Grey	Ion generation stop signal CH2	IN	
Yellow	Ion generation stop signal CH3	IN	
Purple	Ion generation stop signal CH4	IN	
White	Maintenance detection signal	OUT (A contact)	Turns ON when emitters need cleaning.
Black	Error signal	OUT (B contact)	Turns OFF in case of power supply failure, high voltage failure, CPU failure, communication failure, cooling fan motor failure, output signal overcurrent, or inconsistent or CH setting duplication or non-connection of high voltage power supply module (ON when there is no problem).
Orange	—	—	—

IZT41-L, 42-L: IO-Link Power Supply Cable

No.	Cable colour	Signal name	Description
1	Brown	DC (+)	Connect the power supply to operate the ionizer.
2			
3	Blue	DC (–)	
4			
5	Green	F.G.	Make sure to ground with 100 Ω or less to use it as a reference electric potential for ionizer.

IZT41-L, 42-L: IO-Link Communication Cable

No.	Signal name	Description
1	L+	Power supply for IO-Link
2	—	—
3	L–	Power supply for IO-Link
4	C/Q	—
5	—	—

∗ Refer to the power supply cable dimensions on page 41 for the cable specifications.

Frequencies

Series	IZT40	IZT41(-L)	IZT42(-L)
Controller	IZTC40	IZTC41(-L)	
Frequency [Hz]	1	1	0.1
	3	3	0.5
	5	5	1
	8	8	3
	10	10	5
	15	15	8
	20	20	10
	30	30	15
	DC+	DC+	20
	DC–	DC–	30

Wiring Circuit: IZT40

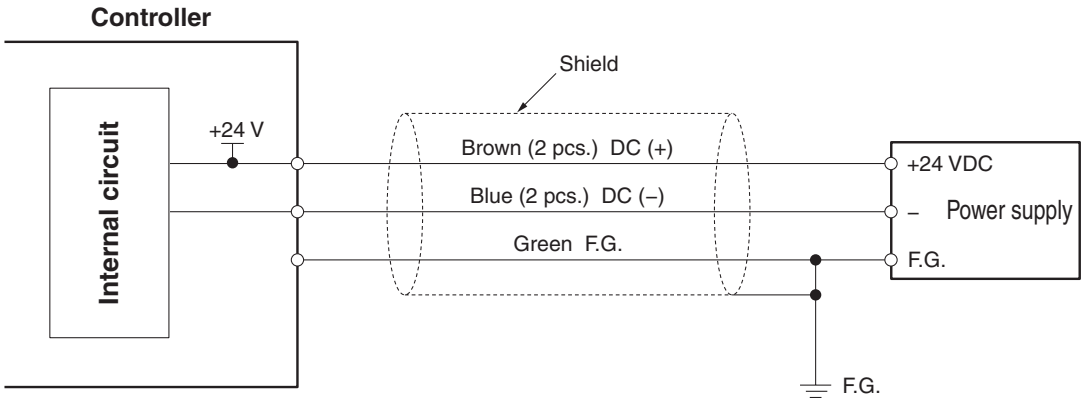

Wiring Circuit: IZT41, 42

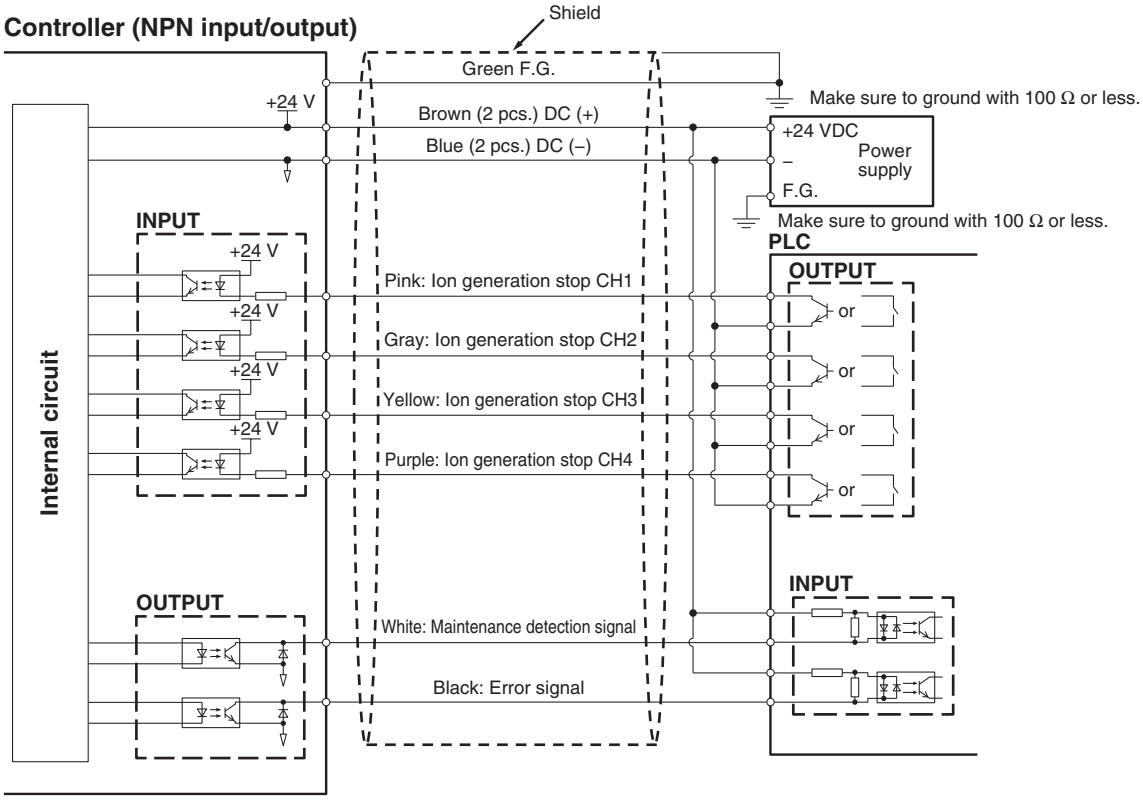

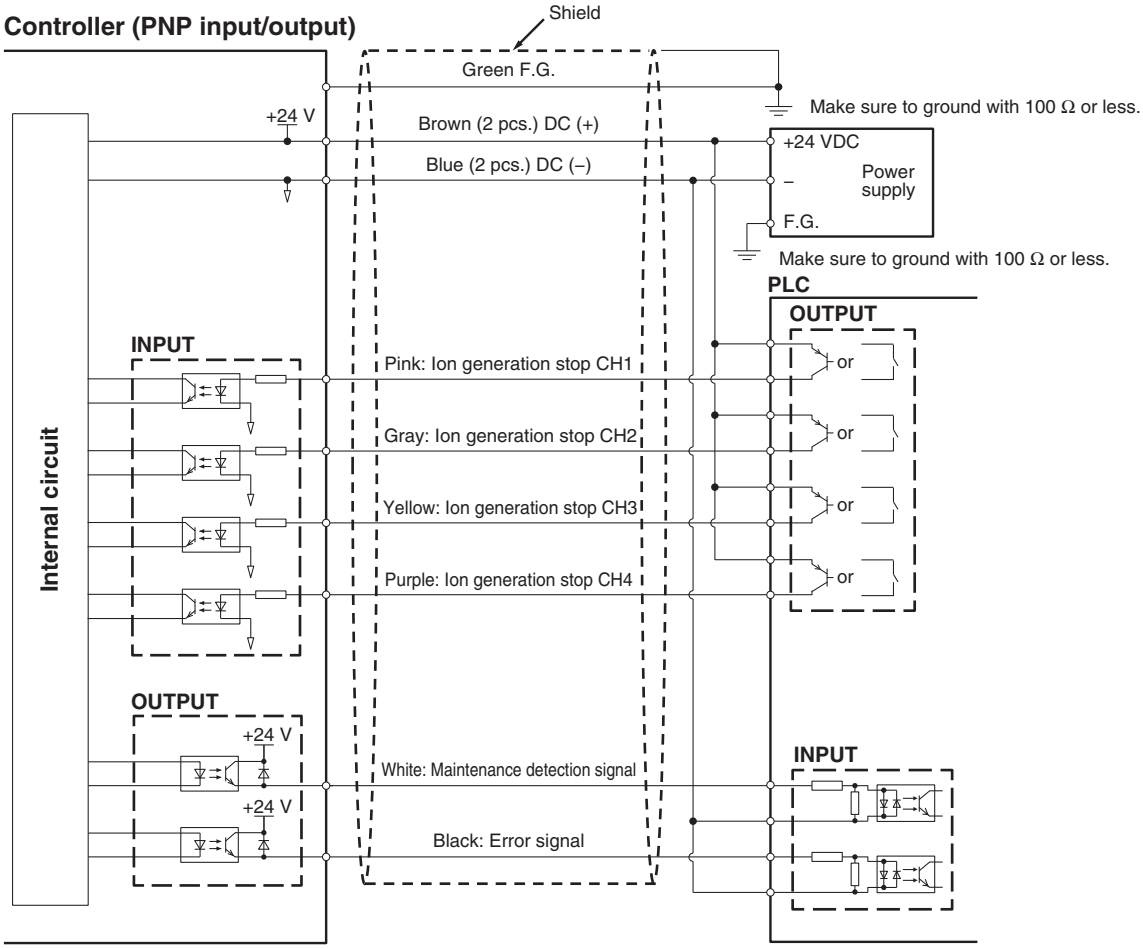

Wiring Circuit: IZT41-L, 42-L

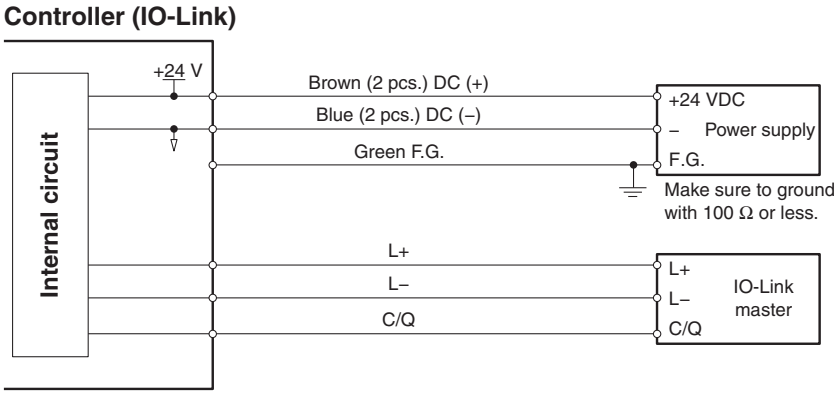

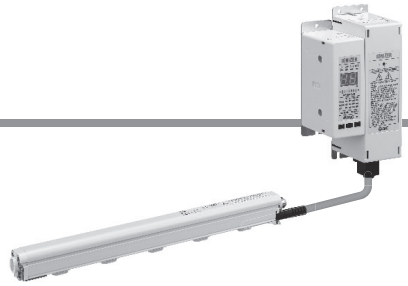

Dimensions

Ionizer IZT40, 41(-L)

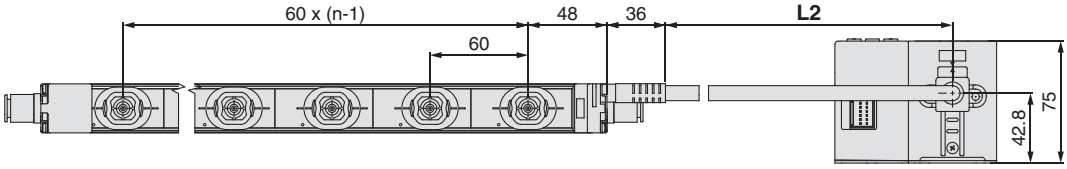

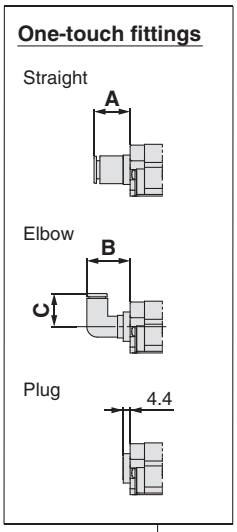

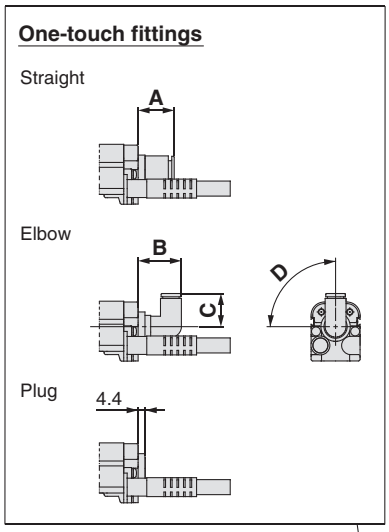

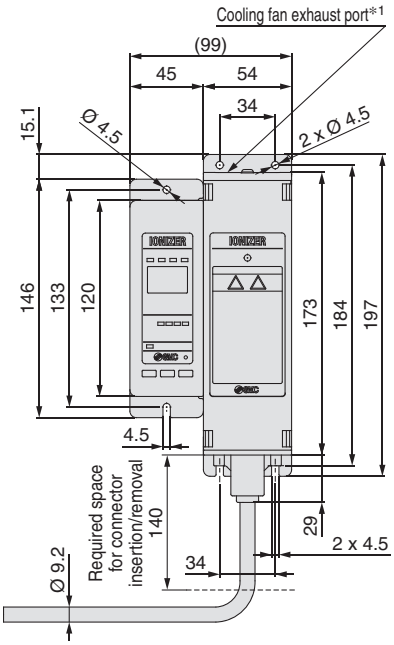

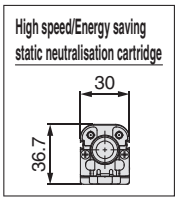

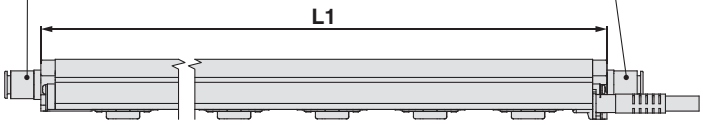

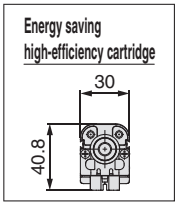

*1 Refer to Mounting (12) in the Specific Product Precautions (page 66).

No. of Emitter Cartridges n, Bar Length L1

Part no.	n [pcs.]	L1 [mm]
IZT□-16	2	160
IZT□-22	3	220
IZT□-34	5	340
IZT□-40	6	400
IZT□-46	7	460
IZT□-58	9	580
IZT□-64	10	640
IZT□-82	13	820
IZT□-112	18	1120
IZT□-130	21	1300
IZT□-160	26	1600
IZT□-190	31	1900
IZT□-232	38	2320
IZT□-250	41	2500

High Voltage Cable Length L2

Symbol	L2 [mm]
1	1000
2	2000
3	3000

One-touch Fittings

Straight [mm]

	Applicable tubing O.D.	A
Metric	Ø 4	13
	Ø 6	13
	Ø 8	15
	Ø 10	22
Inch	Ø 3/16"	15
	Ø 1/4"	14
	Ø 5/16"	15
	Ø 3/8"	23

Elbow [mm]

	Applicable tubing O.D.	B	C	D
Metric	Ø 4	25	19	90°
	Ø 6	27	21	75°
	Ø 8	29	24	73°
	Ø 10	37	27	71°
Inch	Ø 3/16"	26	20	90°
	Ø 1/4"	27	21	75°
	Ø 5/16"	29	24	73°
	Ø 3/8"	36	27	71°

Dimensions

End bracket IZT40-BE1
Intermediate bracket IZT40-BM1

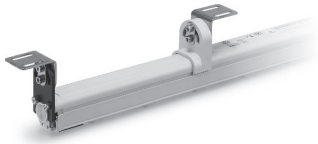

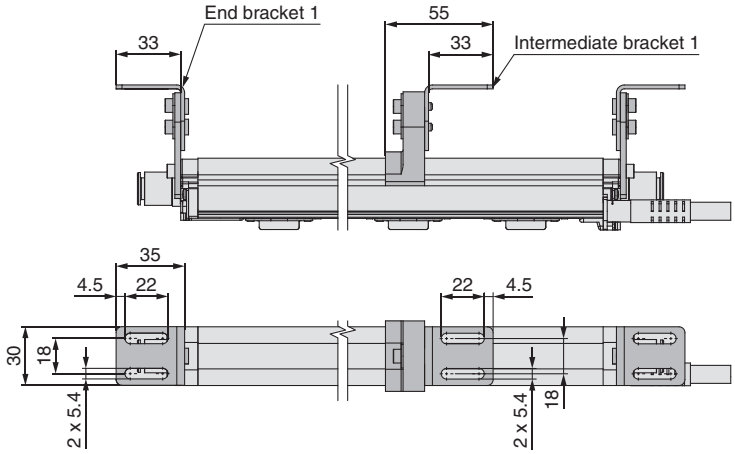

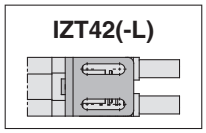

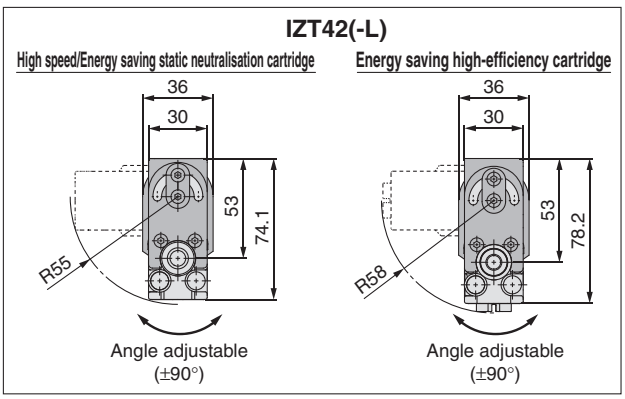

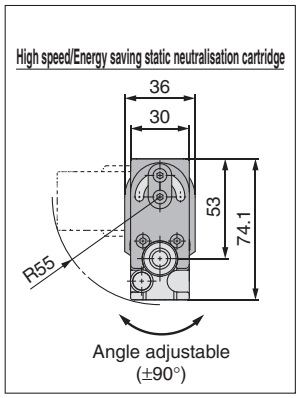

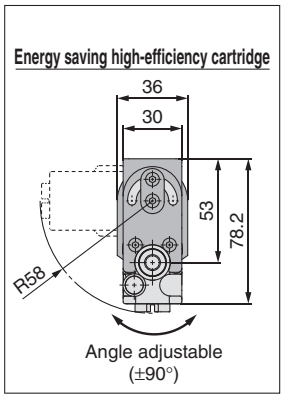

End bracket IZT40-BE2
Intermediate bracket IZT40-BM2

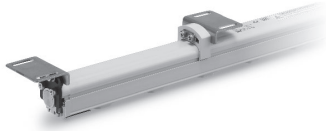

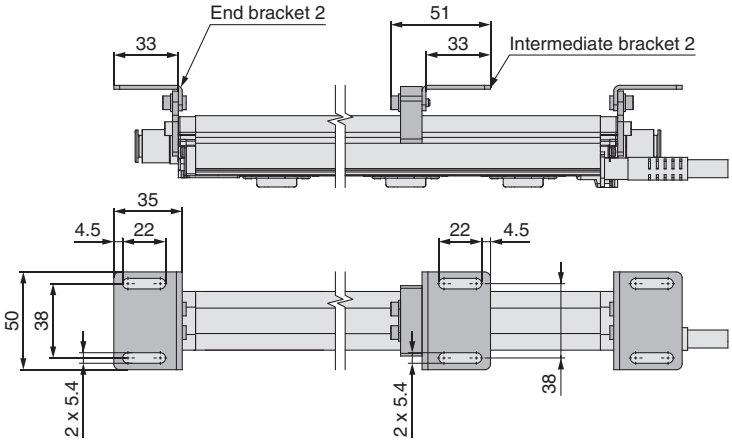

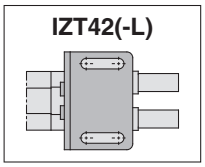

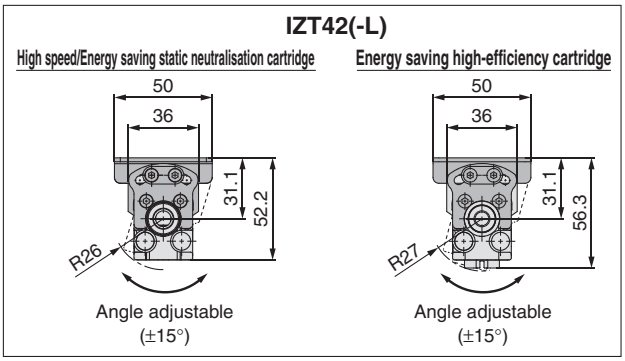

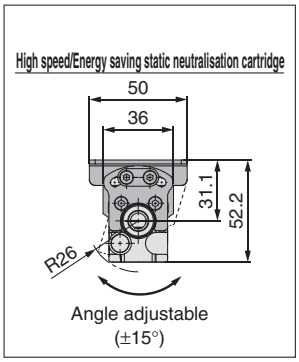

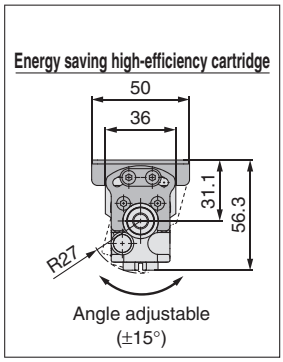

Dimensions

Ionizer IZT42(-L)

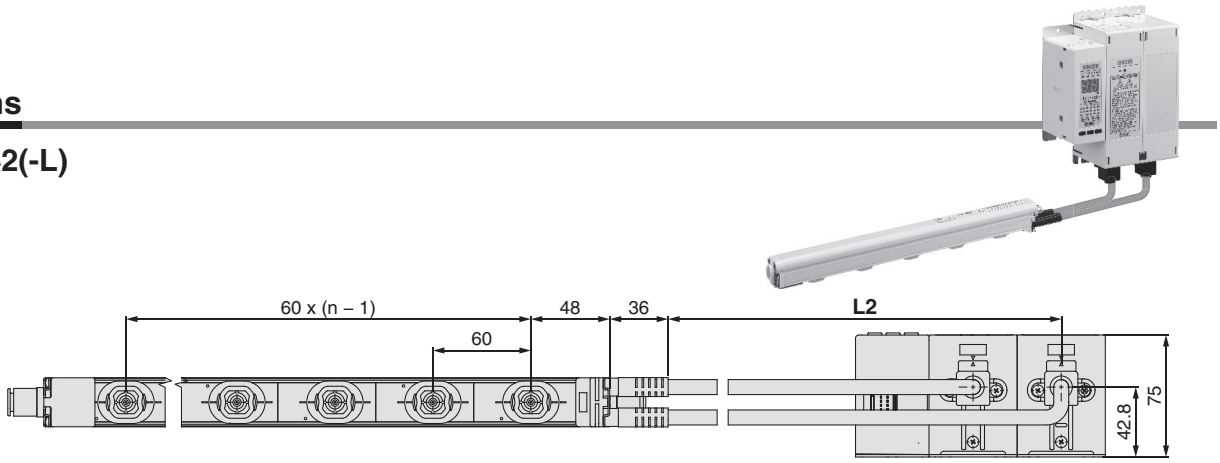

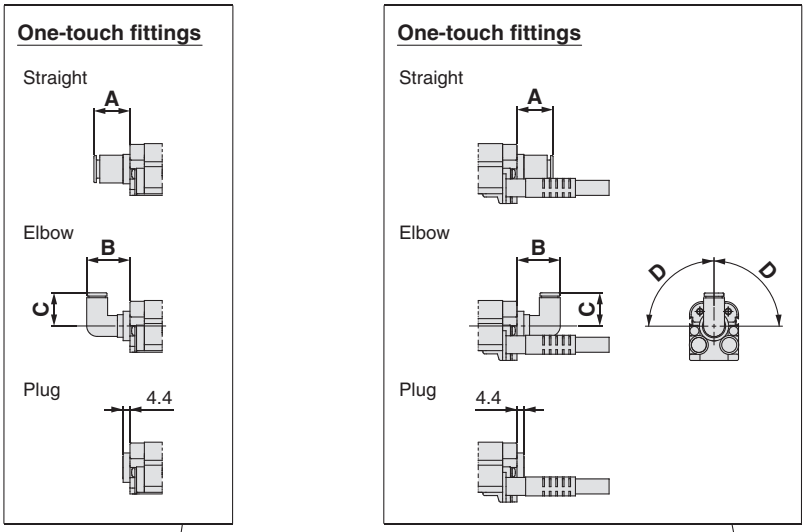

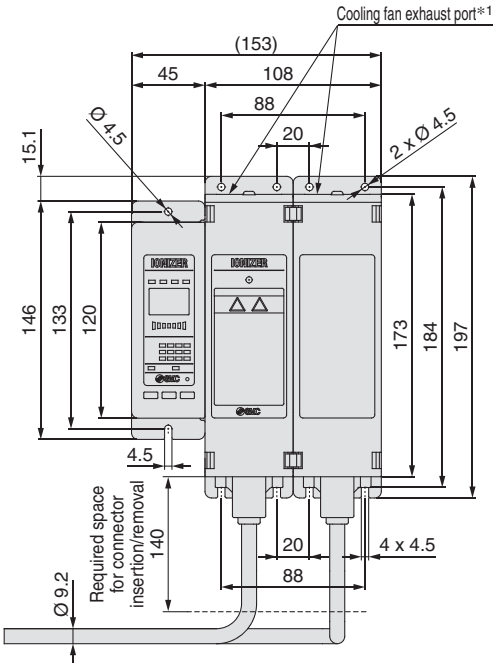

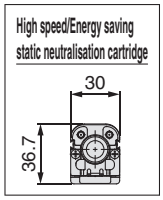

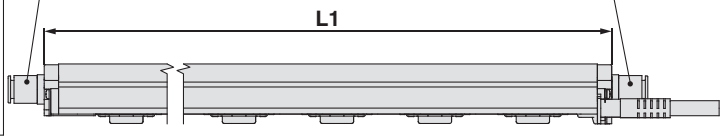

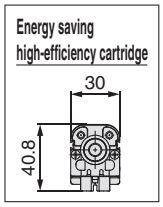

*1 Refer to Mounting (12) in the Specific Product Precautions (page 66).

No. of Emitter Cartridges n, Bar Length L1

Part no.	n [pcs.]	L1 [mm]
IZT□-16	2	160
IZT□-22	3	220
IZT□-34	5	340
IZT□-40	6	400
IZT□-46	7	460
IZT□-58	9	580
IZT□-64	10	640
IZT□-82	13	820
IZT□-112	18	1120
IZT□-130	21	1300
IZT□-160	26	1600
IZT□-190	31	1900
IZT□-232	38	2320
IZT□-250	41	2500

High Voltage Cable Length L2

Symbol	L2 [mm]
1	1000
2	2000
3	3000

One-touch Fittings

Straight [mm]

	Applicable tubing O.D.	A
Metric	Ø 4	13
	Ø 6	13
	Ø 8	15
	Ø 10	22
Inch	Ø 3/16"	15
	Ø 1/4"	14
	Ø 5/16"	15
	Ø 3/8"	23

Elbow [mm]

	Applicable tubing O.D.	B	C	D
Metric	Ø 4	25	19	90°
	Ø 6	27	21	75°
	Ø 8	29	24	73°
	Ø 10	37	27	71°
Inch	Ø 3/16"	26	20	90°
	Ø 1/4"	27	21	75°
	Ø 5/16"	29	24	73°
	Ø 3/8"	36	27	71°

Dimensions

Controller IZT40, 41, 42

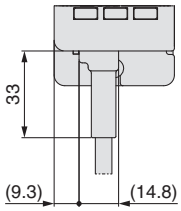

When a power supply cable is inserted

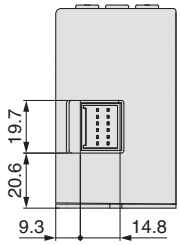

IZT41, 42 IZT40

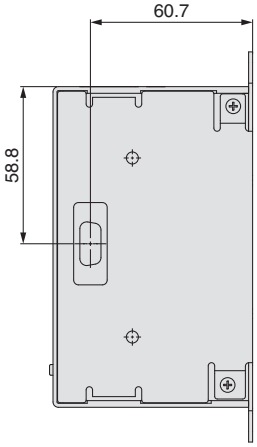

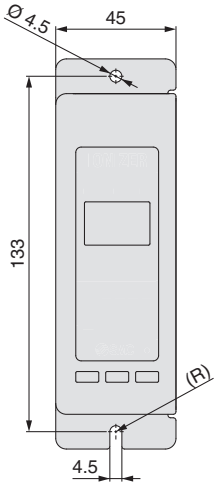

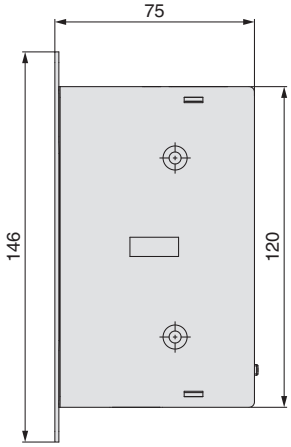

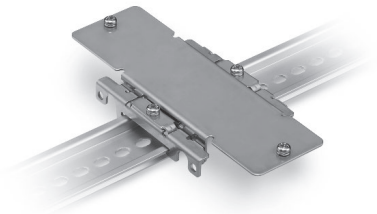

When a DIN rail mounting bracket (IZT40-B1) is used

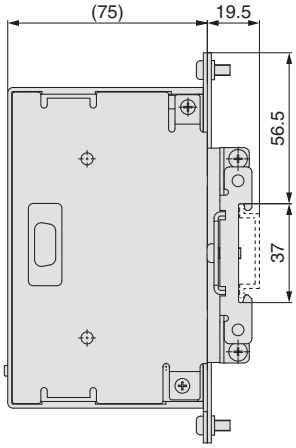

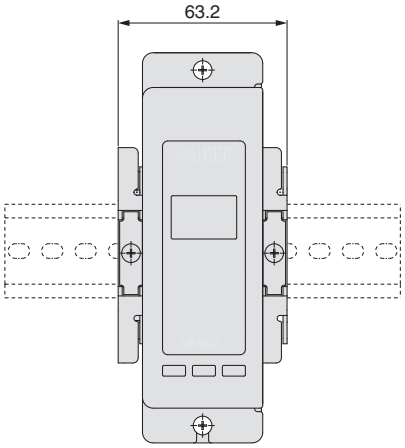

Dimensions

Controller IZT41-L, 42-L

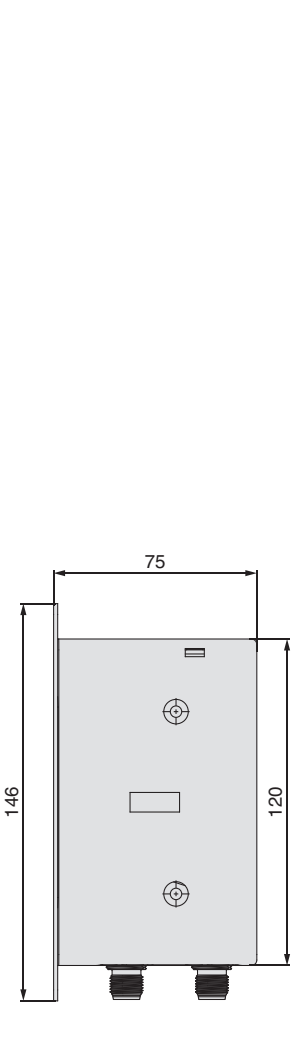

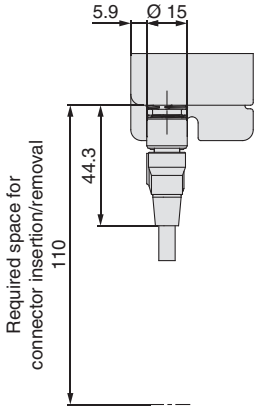

When a straight cable is inserted

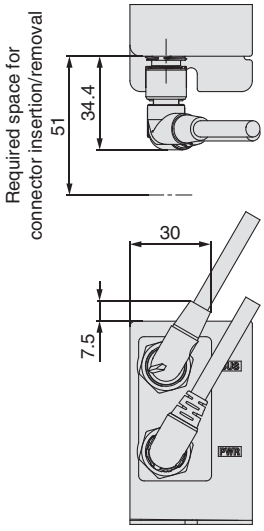

When angled cables are inserted

When a DIN rail mounting bracket (IZT40-B1) is used

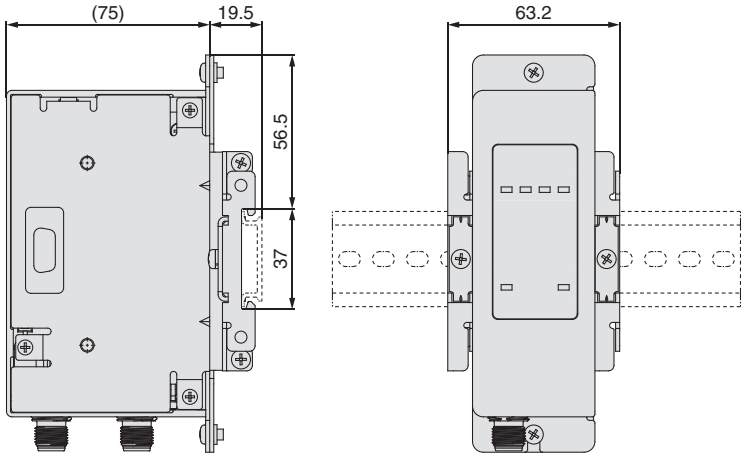

Dimensions

High voltage power supply module for IZT40, 41(-L)

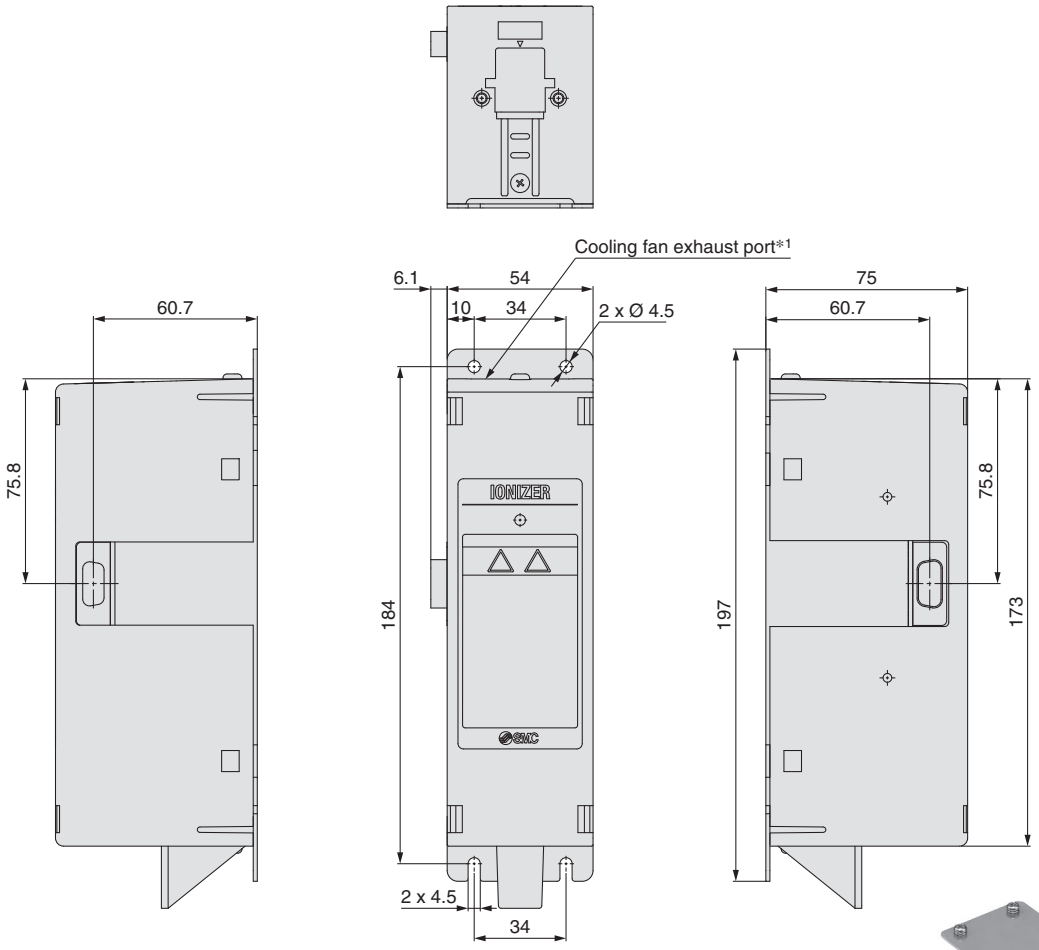

*1 Refer to Mounting (12) in the Specific Product Precautions (page 66).

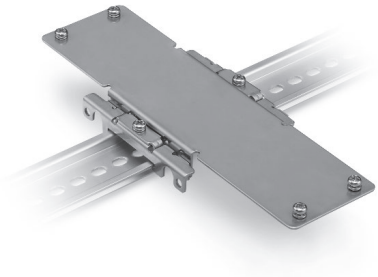

When a DIN rail mounting bracket (IZT40-B2) is used

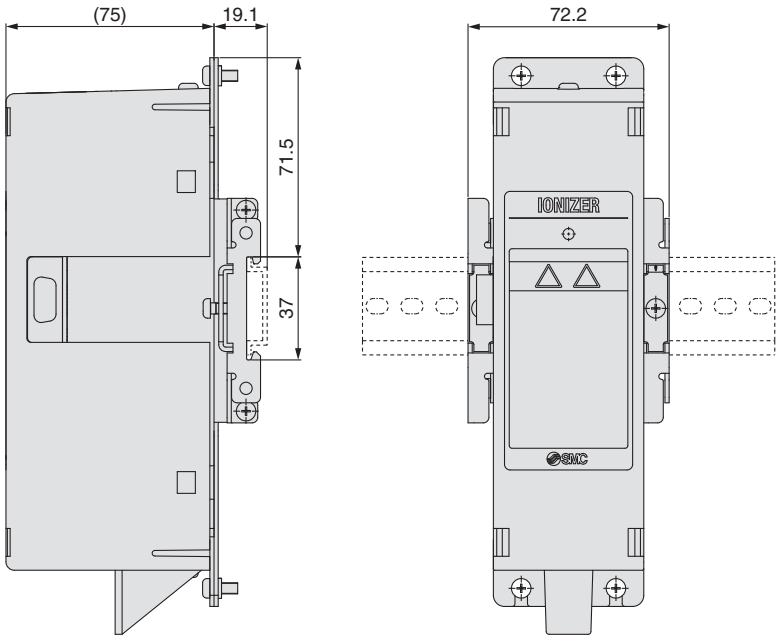

Dimensions

High voltage power supply module for IZT42(-L)

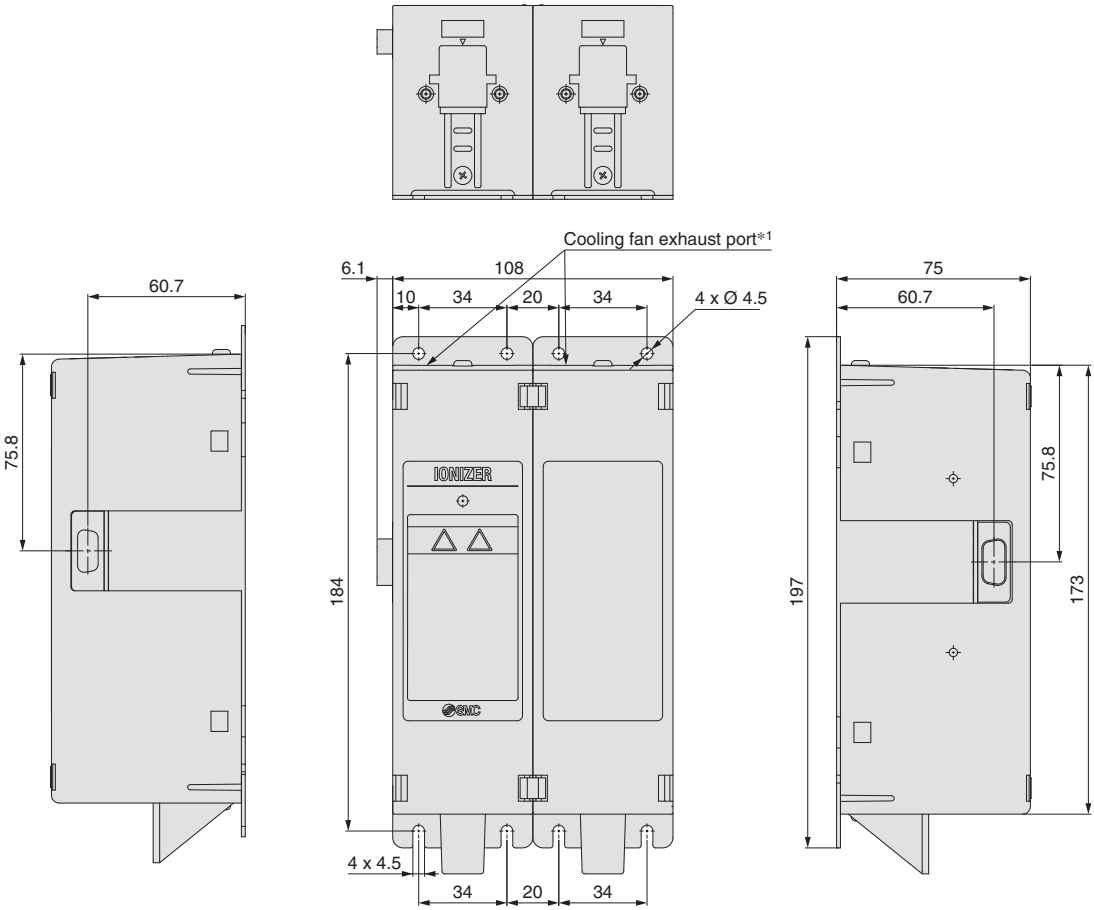

*1 Refer to Mounting (12) in the Specific Product Precautions (page 66).

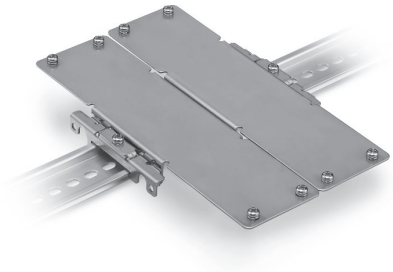

When a DIN rail mounting bracket (IZT40-B3) is used

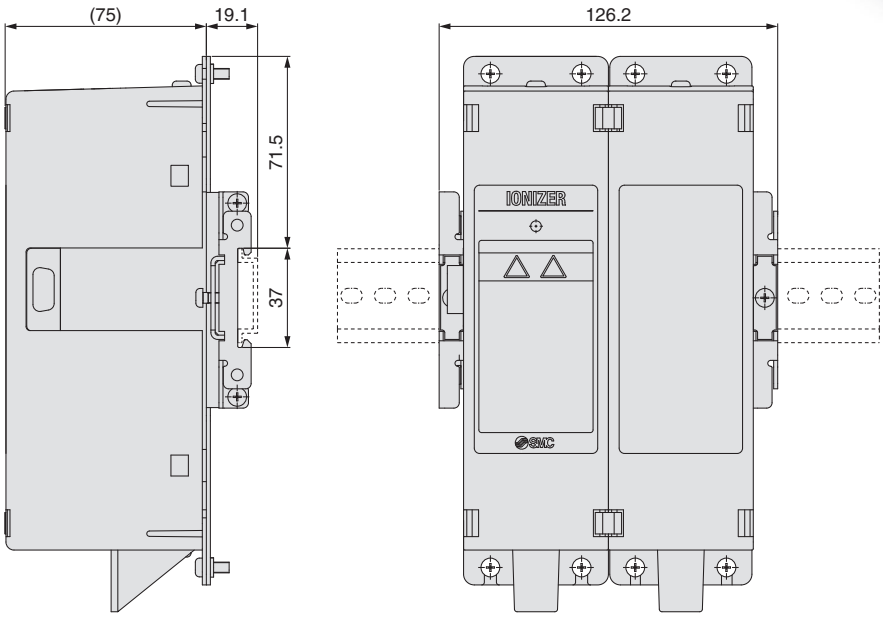

Dimensions

Power supply cable IZT40, 41, 42

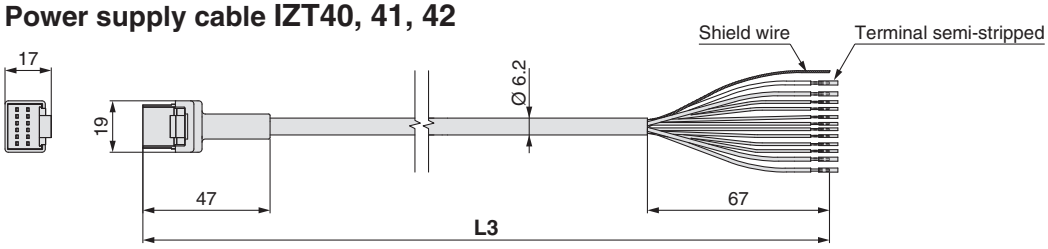

Cable Length L3

Part number	L3 [mm]
IZT40-CP3	2950
IZT40-CP5	5000
IZT40-CP10	9800
IZT40-CP15	15000

Cable Specifications

No. of cable wires/Size		12 cores/AWG20 (4 cores), AWG28 (8 cores)
Conductor	Nominal cross section	0.54 mm² (4 cores), 0.09 mm² (8 cores)
	O.D.	0.96 mm (4 cores), 0.38 mm (8 cores)
Insulator	O.D.	1.4 mm Brown, Blue
		0.7 mm White, Green, Pink, Purple, Grey, Yellow, Orange, Black
Sheath	Material	Lead-free PVC
	O.D.	6.2 mm

IO-Link power supply cable IZT41-L, 42-L

Entry direction: Straight

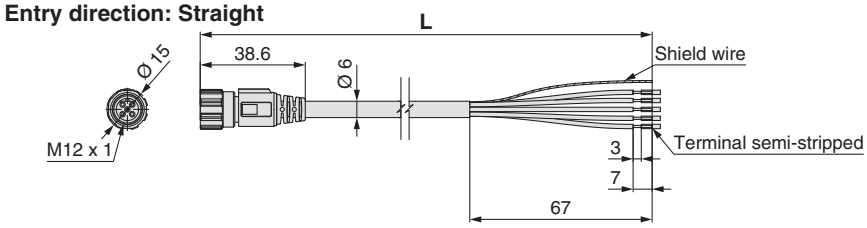

Entry direction: Angled

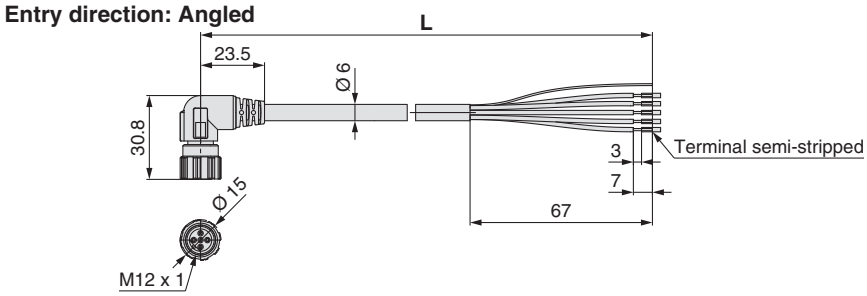

Power Supply Cable Length L

Symbol	Entry direction	Length [m]
IZT41-CPJ	Straight	3
IZT41-CPK		5
IZT41-CPM		10
IZT41-CPS	Angled	3
IZT41-CPT		5
IZT41-CPZ		10

Power Supply Cable Specifications

No. of cable wires/Size		5 cores/AWG22
Conductor	Nominal cross section	0.3 mm²
	O.D.	0.76 mm
Insulator	O.D.	1.3 mm
Sheath	Material	PVC (Lead-free)
	O.D.	6.0 mm

IO-Link communication cable IZT41-L, 42-L

Entry direction: Straight

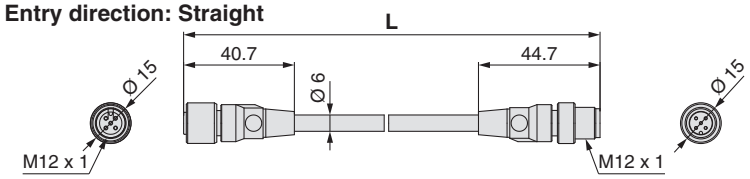

Entry direction: Angled

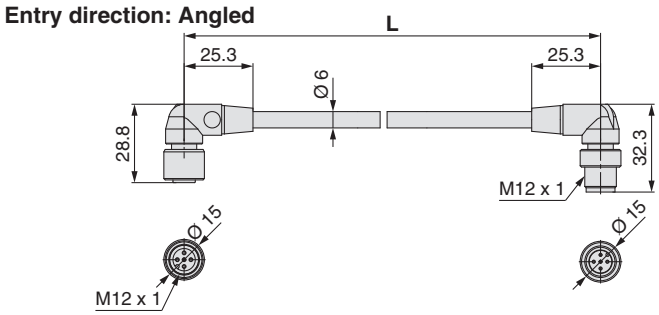

Communication Cable Length L

Symbol	Entry direction	Length [m]
IZT41-CEE	Straight	0.5
IZT41-CEG		1
IZT41-CEH		2
IZT41-CEJ		3
IZT41-CEK		5
IZT41-CEM		10
IZT41-CEP	Angled	0.5
IZT41-CEQ		1
IZT41-CER		2
IZT41-CES		3
IZT41-CET		5
IZT41-CEZ		10

Communication Cable Specifications

No. of cable wires/Size		5 cores/AWG22
Conductor	Nominal cross section	0.3 mm²
	O.D.	0.76 mm
Insulator	O.D.	1.5 mm
Sheath	Material	PVC (Lead-free)
	O.D.	6.0 mm

Dimensions

Separate cable IZT40-CF□

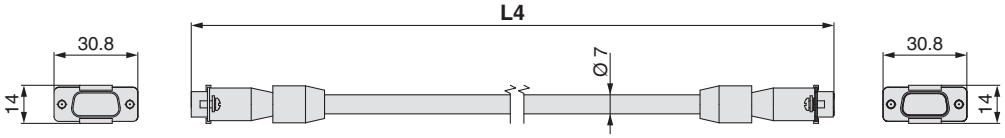

Cable Length L4

Part number	**L4** [mm]
IZT40-CF1	1000
IZT40-CF2	2000
IZT40-CF3	3000

When a separate cable is used

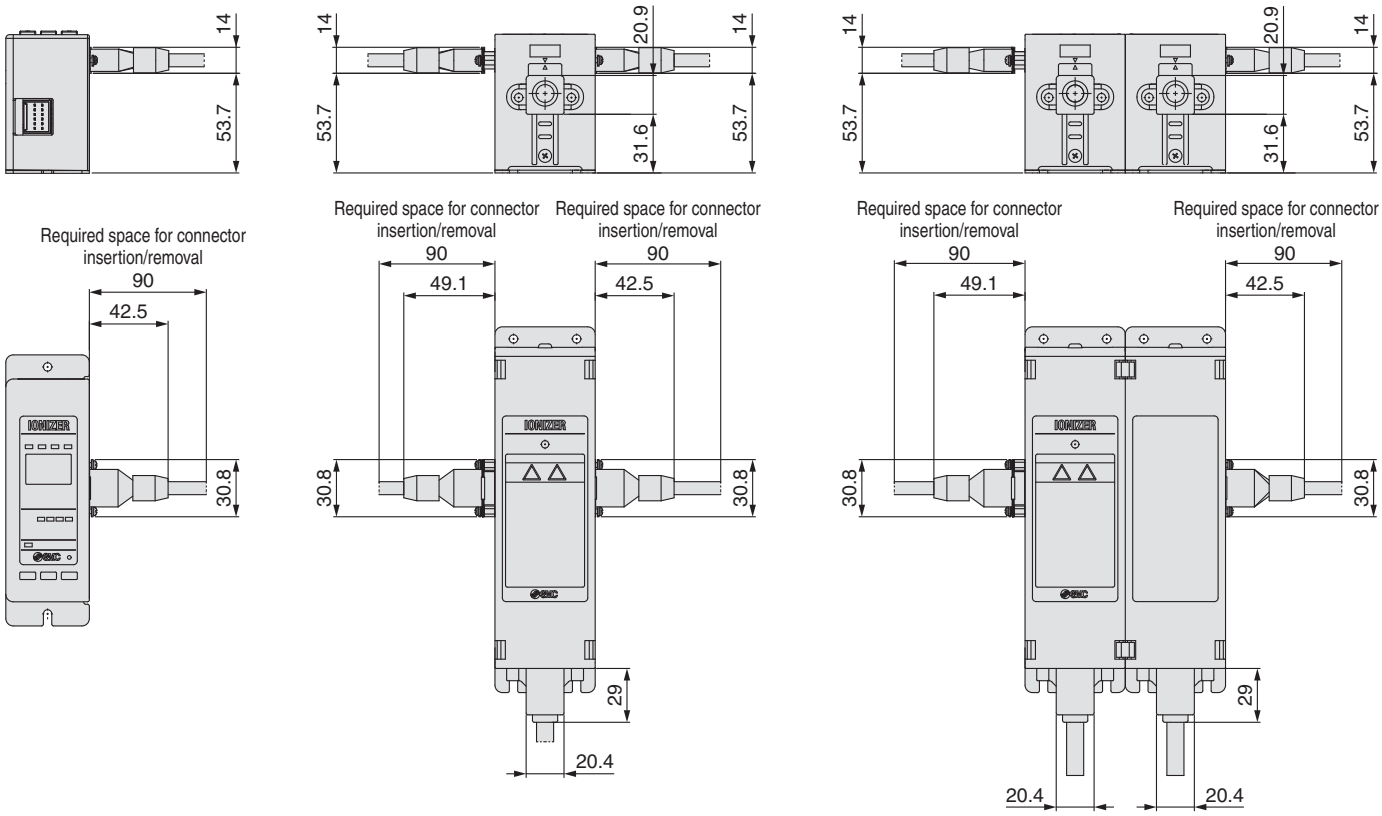

Dimensions

High voltage cable holder

Straight IZT40-E1

Cross-sectional view A-A

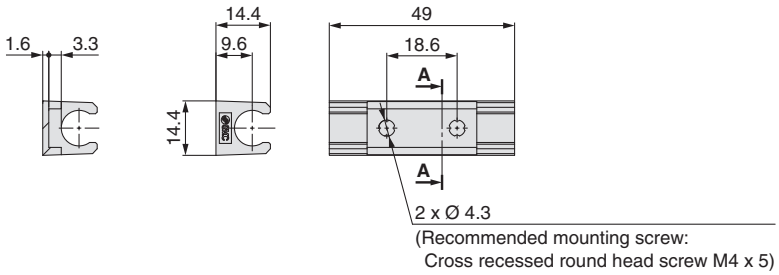

Elbow IZT40-E2

Cross-sectional view A-A

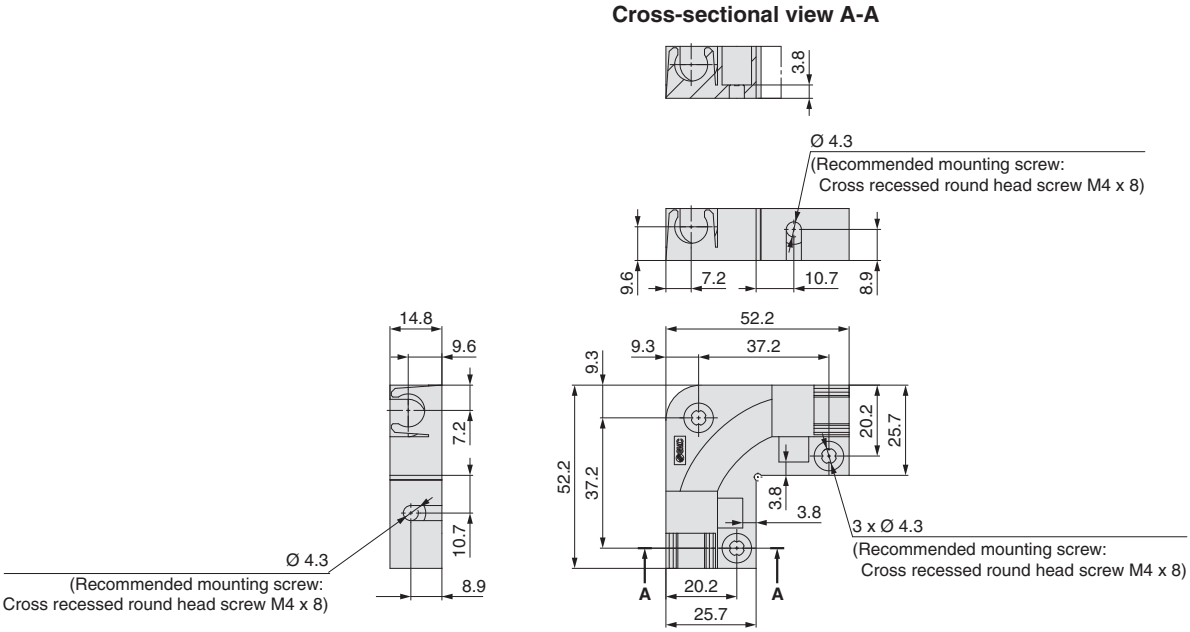

IZT43(-L) Series
Technical Data

Static Neutralisation Characteristics

＊ Static neutralisation characteristics are based on data using a charged plate (dimensions: 150 mm x 150 mm, capacitance: 20 pF) as defined in the U.S. ANSI standards (ANSI/ESD STM3.1-2015). Use this data only as a guideline for model selection because the values vary depending on the material and/or size of the subject.

① Installation Distance and Discharge Time (Discharge Time from 1000 V to 100 V)

IZT43(-L) AC Mode

For cartridges without air purge

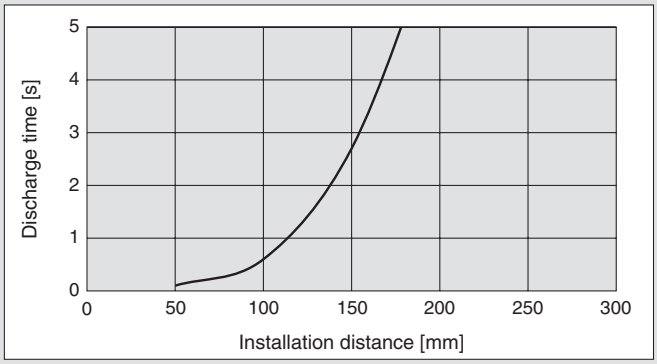

High speed static neutralisation cartridge

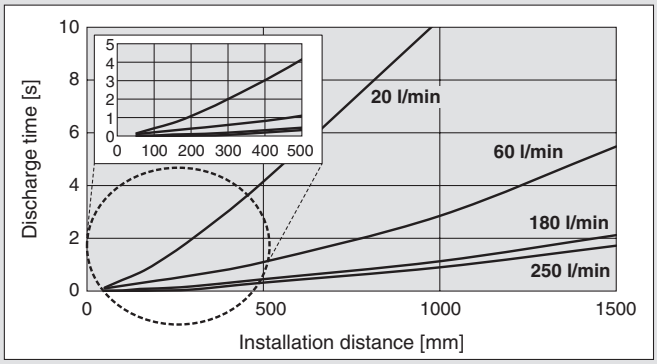

Energy saving static neutralisation cartridge

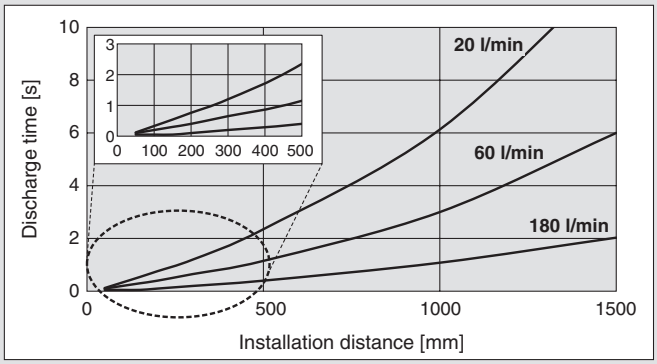

② Static Neutralisation Range (Discharge Time from 1000 V to 100 V)

IZT43(-L) Ion Generation Frequency: 30 Hz

1) For cartridges without air purge

For IZT43(-L)-D, L

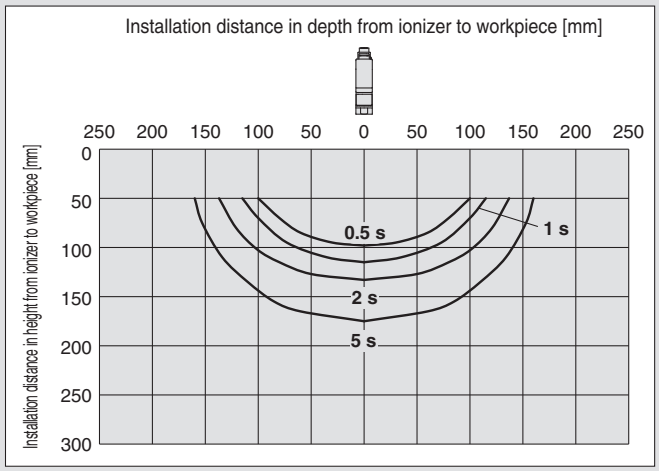

2) High speed static neutralisation cartridge, Supply pressure: 0.5 MPa

For IZT43(-L)-D

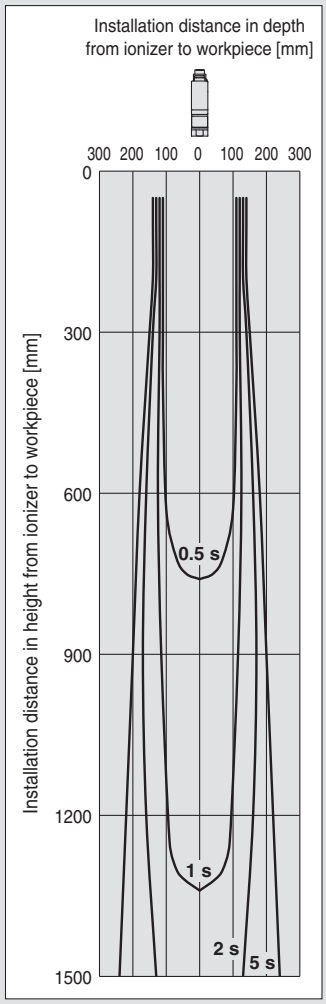

3) Energy saving static neutralisation cartridge, Supply pressure: 0.5 MPa

For IZT43(-L)-L

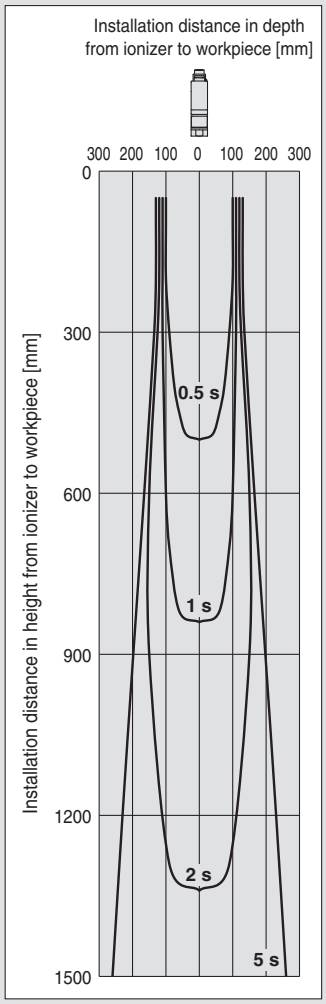

Static Neutralisation Characteristics

* Static neutralisation characteristics are based on data using a charged plate (dimensions: 150 mm x 150 mm, capacitance: 20 pF) as defined in the U.S. ANSI standards (ANSI/ESD STM3.1-2015). Use this data only as a guideline for model selection because the values vary depending on the material and/or size of the subject.

③ Pressure — Flow Rate Characteristics

High speed static neutralisation cartridge

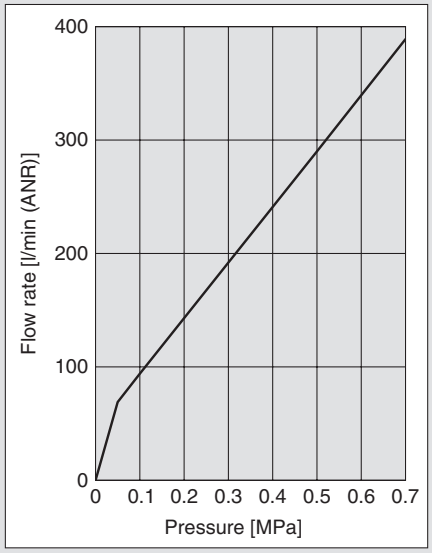

Energy saving static neutralisation cartridge

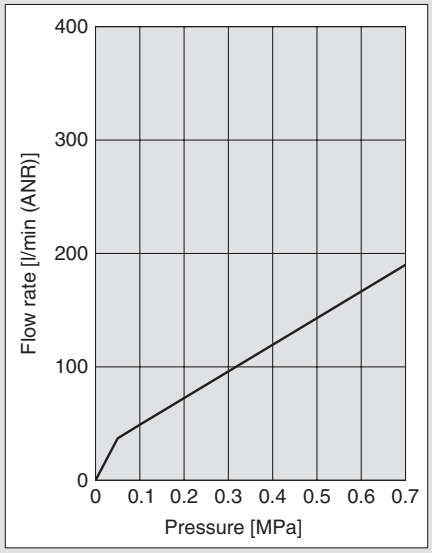

How to measure

a) Air supply

IZT43(-L)-D, L Connecting tube: O.D. ∅ 6 x I.D. ∅ 4

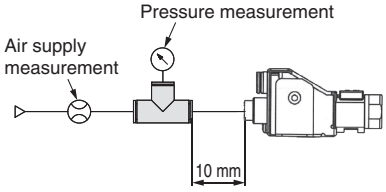

Separate Controller

Nozzle Type Ionizer

IZT43(-L) Series

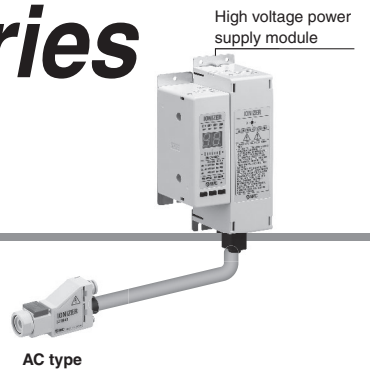

How to Order

Nozzle + **High voltage power supply module** + **Controller**

Transistor input/output IZT 43 – D 1 6H ❺ – 3 ❻ F U

IO-Link IZT 43 – D 1 6H L – T R F U

❶ ❷ ❸ ❹ ❼ ❽ ❾ ❿

❶ Model

Symbol	Model
43	AC type

❷ Emitter cartridge type

Symbol	Type
D	High speed static neutralisation cartridge
L	Energy saving static neutralisation cartridge

❸ High voltage cable length

Symbol	Length [m]
1	1
2	2
3	3

∗ The number of included high voltage cable holders differs depending on the high voltage cable length. (Refer to the table below.)

Number of included high voltage cable holders
⇨ Refer to page 51.

Symbol	Straight	Elbow
1	1	1
2	2	1
3	3	1

❹ One-touch fitting

Symbol	Metric size
6H	Ø 6 Straight
6L	Ø 6 Elbow

Symbol	Inch size
7H	Ø 1/4" Straight
7L	Ø 1/4" Elbow

❺ Input/Output

Symbol	Input/Output
—	NPN
P	PNP

❻ Power supply cable length

Symbol	Length [m]
3	3
5	5
10	10
15	15
N	None

∗ To use an AC adapter, specify "N", and select the AC adapter sold separately.

❼ Power supply cable entry direction/length

Symbol	Entry direction	Length [m]
N	None	
J	Straight	3
K		5
M		10
S	Angled	3
T		5
Z		10

❽ Communication cable entry direction/length

Symbol	Entry direction	Length [m]
N	None	
E	Straight	0.5
G		1
H		2
J		3
K		5
M		10
P	Angled	0.5
Q		1
R		2
S		3
T		5
Z		10

❾ Nozzle bracket
⇨ Refer to page 51.

Symbol	Type
—	Without bracket
B	L-bracket
F	Angle adjustment bracket

❿ DIN rail mounting bracket for controller and high voltage power supply module
⇨ Refer to page 51.

Symbol	For Controller	For High voltage power supply module
—	None	None
U	Included	Included
W	Included	None
Y	None	Included

For Individual Parts

How to Order

AC type

Combinations

	Nozzle/**IZTN**	High voltage power supply module/**IZTP**	Controller/**IZTC**
	43	43	41
IZT43	●	●	●

Nozzle

IZTN 43 – D 1 6H – F

❶ ❷ ❸ ❹ ❺

⚠ Caution

The transistor input/output specification and the IO-Link specification cannot be installed in combination.

❶ Model

Symbol	Model
43	AC type

❷ Emitter cartridge type

Symbol	Type
D	High speed static neutralisation cartridge
L	Energy saving static neutralisation cartridge

❸ High voltage cable length

Symbol	High voltage cable length [m]
1	1
2	2
3	3

∗ The number of included high voltage cable holders differs depending on the high voltage cable length. (Refer to the table below.)

Number of included high voltage cable holders ⇨ Refer to page 51.

Symbol	IZT43	
	Straight	Elbow
1	1	1
2	2	1
3	3	1

❹ One-touch fitting

Symbol	Metric size
6H	Ø 6 Straight
6L	Ø 6 Elbow

Symbol	Inch size
7H	Ø 1/4" Straight
7L	Ø 1/4" Elbow

❺ Nozzle bracket ⇨ Refer to page 51.

Symbol	Type
—	Without bracket
B	L-bracket
F	Angle adjustment bracket

Controller

Transistor input/output **IZTC 41 – ☐ 3 – W**

❷ ❸

IO-Link **IZTC 41 – L J G – W**

❶ ❹ ❺ ❻

Transistor input/output | IO-Link

AC, Dual AC type

❶ Model

Symbol	Model
41	AC type, Dual AC type

❷ Input/Output

Symbol	Input/Output
—	NPN
P	PNP

❸ Power supply cable length

Symbol	Length [m]
3	3
5	5
10	10
15	15
N	None

❹ Power supply cable entry direction/length

Symbol	Entry direction	Length [m]
N	None	
J	Straight	3
K		5
M		10
S	Angled	3
T		5
Z		10

❺ Communication cable entry direction/length

Symbol	Entry direction	Length [m]
N	None	
E	Straight	0.5
G		1
H		2
J		3
K		5
M		10
P	Angled	0.5
Q		1
R		2
S		3
T		5
Z		10

❻ DIN rail mounting bracket

⇨ Refer to page 51.

Symbol	Type
—	None
W	Included

High voltage power supply module

Transistor input/output **IZTP 43 – Y**

IO-Link **IZTP 43 – L – Y**

❶ ❷

AC type

❶ Model

Symbol	Model
43	AC type (For Nozzle)

❷ DIN rail mounting bracket ⇨ Refer to page 51.

Symbol	Type
—	None
Y	Included

Specifications

Ionizer Specifications

Ion generation method		Corona discharge type
Method of applying voltage		AC, DC*1
Applied voltage		±6000 V
Offset voltage*2		±30 V or less
Air purge	**Fluid**	Air (Clean, dry air)
	Operating pressure	0.7 MPa or less
	Connecting tube size	Metric size: Ø 6 Inch size: Ø 1/4"
Current consumption		0.4 A or less (+0.4 A or less per ionizer when connected)
Power supply voltage		24 VDC ±10 %
Input signal*3	**NPN specification**	Connected to DC (–) Voltage range: 5 VDC or less Current consumption: 5 mA or less
	PNP specification	Connected to DC (+) Voltage range: 19 VDC to power supply voltage Current consumption: 5 mA or less
Output signal*3	**NPN specification**	Max. load current: 100 mA Residual voltage: 1 V or less (Load current at 100 mA) Max. applied voltage: 26.4 VDC
	PNP specification	Max. load current: 100 mA Residual voltage: 1 V or less (Load current at 100 mA)
IO-Link device*4		Voltage range: 18 to 30 VDC Current consumption: 100 mA or less * For details, refer to the “IO-Link Communication Specifications” table below.
Function		Auto balance, Maintenance detection, High voltage abnormality detection (Ion generation stops when an abnormality is detected.), and Ion generation stop input
Effective static neutralisation distance		50 to 2000 mm
Ambient and fluid temperatures	**Controller** **High voltage power supply module** **Nozzle**	0 to 40 °C
Ambient humidity		35 to 65 % Rh (No condensation)
Material	**Controller**	Cover: ABS, Aluminium, Switch: Silicone rubber*3
	High voltage power supply module	ABS, Aluminium
	Nozzle	Housing: PBT, Stainless steel, Emitter cartridge: PBT, Emitter: Tungsten, High voltage cable: Silicone rubber, PVC, Stainless steel
Standards/Directive		CE marking (EMC Directive)

*1 Apply cathode or anode to DC.
*2 When air purge is performed between a charged object and an ionizer at a distance of 300 mm
*3 Only applicable to transistor input/output specification products
*4 Only applicable to IO-Link compatible products

IO-Link Communication Specifications

IO-Link type	Device
IO-Link version	V1.1
Configuration file format	IODD file*1
Communication speed	COM2 (38.4 kbps)
Min. cycle time	8.0 ms
Process data length	Input data: 13 bytes, Output data: 9 bytes
On request data communication	Yes
Data storage function	Yes
Event function	Yes
Vendor ID	131 (0 x 0083)
Device ID	581 (0 x 000245)

*1 The configuration file can be downloaded from the SMC website: https://www.smc.eu

Specifications

Weight

[g]

	Controller	High voltage power supply module
IZT43(-L)	210 (230)	680 (690)

∗ The values in ( ) are for IO-Link compatible products.

Nozzle Weight

[g]

Nozzle		
IZT43	**High voltage cable (1 m)**	200
	High voltage cable (2 m)	310
	High voltage cable (3 m)	440

AC Adapter (Sold Separately)

⇨ Refer to page 52.

Model	**IZT40-CG1, IZT40-CG2**
Input voltage	100 to 240 VAC, 50/60 Hz
Output current	1.9 A
Ambient temperature	0 to 40 °C
Ambient humidity	35 to 65 % Rh (No condensation)
Weight	375 g
Standards/Directive	CE, cUL

Construction

IZT43(-L) series

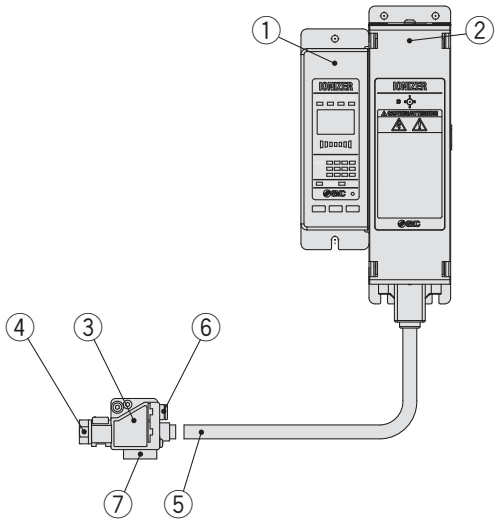

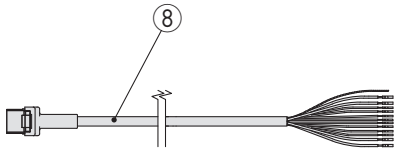

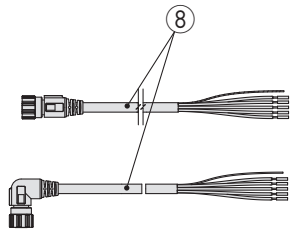

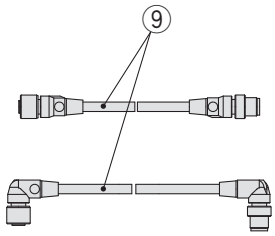

No.	Description
1	**Controller**
2	**High voltage power supply module**
3	**Nozzle**
4	**Emitter cartridge**
5	**High voltage cable**
6	**One-touch fitting**
7	**Bracket**
8	**Power supply cable**
9	**Communication cable**

Accessories (for Individual Parts)

Emitter cartridge (For IZT43(-L))

IZT43 – N D

Emitter cartridge type/ Emitter material

Symbol	Type	Material
D	High speed static neutralisation cartridge	Tungsten
L	Energy saving static neutralisation cartridge	Tungsten

Tungsten (Colour: White)

Cartridge colour	Emitter material
White	Tungsten

Nozzle bracket (For IZT43(-L))

IZT43 – B L1

Nozzle bracket

Symbol	Type
L1	L-bracket
L2	Angle adjustment bracket

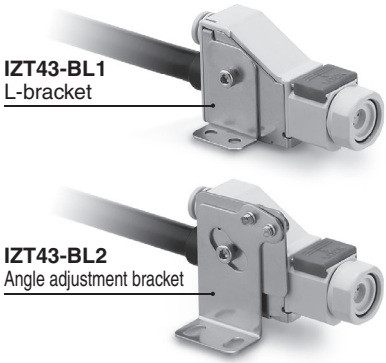

Power supply cable (IZT43)

IZT40 – CP 3

Cable specifications
⇨ Refer to page 60.

Power supply cable length

Symbol	Length [m]
3	3
5	5
10	10
15	15

IO-Link power supply cable (IZT43-L)

IZT41 – CP J

Power supply cable entry direction/length

Symbol	Entry direction	Length [m]
J	Straight	3
K		5
M		10
S	Angled	3
T		5
Z		10

IO-Link communication cable (IZT43-L)

IZT41 – CE G

Communication cable entry direction/length

Symbol	Entry direction	Length [m]
E	Straight	0.5
G		1
H		2
J		3
K		5
M		10
P	Angled	0.5
Q		1
R		2
S		3
T		5
Z		10

DIN rail mounting bracket for controller and high voltage power supply module

IZT40 – B 1

DIN rail mounting bracket

Symbol	Type
1	For Controller
2	For High voltage power supply module

For Controller

IZT40-B1

For High voltage power supply module

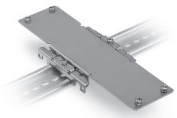

IZT40-B2

High voltage cable holder

IZT40 – E 1

High voltage cable holder

Symbol	Type
1	Straight
2	Elbow

Straight

IZT40-E1

Elbow

IZT40-E2

Accessories Sold Separately

Body assembly (For IZT43(-L))

IZT43 – A001 – D 6H

Emitter cartridge type

Symbol	Type
D	High speed static neutralisation cartridge
L	Energy saving static neutralisation cartridge

One-touch fitting

Symbol	Metric size
6H	Ø 6 Straight
6L	Ø 6 Elbow

Symbol	Inch size
7H	Ø 1/4" Straight
7L	Ø 1/4" Elbow

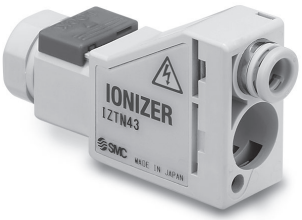

High voltage cable assembly (For IZT43(-L))

IZT43 – A002 – 1

High voltage cable length

Symbol	Length [m]
1	1
2	2
3	3

AC adapter (IZT43)

IZT40 – CG 2EU

AC adapter

Symbol	Type
2EU	With AC cord
2	Without AC cord

∗ External input and output cannot be used when the AC adapter is being used.

AC adapter

Separate cable (IZT43)

IZT40 – CF 1

Cable length

Symbol	Length [m]
1	1
2	2
3	3

Cleaning kit (For IZT43)

IZT43 – M2

Replacement felt pad: IZT43-A003
Replacement rubber grindstone: IZT43-A004

Wiring: IZT43(-L)

IZT43

Cable colour	Signal name	Signal direction	Description
Brown	DC (+)	IN	Connect the power supply to operate the product.
Blue	DC (–)	IN	
Green	F.G.	—	Frame ground of the product. Make sure to ground with a resistance value of 100 Ω or less to use it as a reference electric potential of offset voltage. If not grounded, performance cannot be acquired, and also causes failure of the equipment.
Pink	Ion generation stop signal CH1	IN	Signal input to turn ON/OFF ion generation of each bar (CH1 to 4). NPN specification: Stops generating ions by connecting to 0 V. (Starts generating ions when disconnected.) PNP specification: Stops generating ions by connecting to 24 VDC. (Starts generating ions when disconnected.)
Grey	Ion generation stop signal CH2	IN	
Yellow	Ion generation stop signal CH3	IN	
Purple	Ion generation stop signal CH4	IN	
White	Maintenance detection signal	OUT (A contact)	Turns ON when emitters need cleaning.
Black	Error signal	OUT (B contact)	Turns OFF in case of power supply failure, high voltage failure, CPU failure, communication failure, cooling fan motor failure, output signal overcurrent, or inconsistent or CH setting duplication or non-connection of high voltage power supply module (ON when there is no problem).
Orange	—	—	—

IZT43-L: IO-Link Power Supply Cable

No.	Cable colour	Signal name	Description
1	Brown	DC (+)	Connect the power supply to operate the product.
2			
3	Blue	DC (–)	
4			
5	Green	F.G.	Frame ground of the product. Make sure to ground with a resistance value of 100 Ω or less to use it as a reference electric potential of offset voltage. If not grounded, performance cannot be acquired, and also causes failure of the equipment.

∗ Refer to the power supply cable dimensions on page 60 for the cable specifications.

IZT43-L: IO-Link Communication Cable

No.	Signal name	Description
1	L+	Power supply for IO-Link
2	—	—
3	L–	Power supply for IO-Link
4	C/Q	—
5	—	—

Frequencies

Series	IZT43(-L)
Controller	IZTC41(-L)
Frequency [Hz]	1
	3
	5
	8
	10
	15
	20
	30
	DC+
	DC–

Wiring Circuit: IZT43-L

Controller (IO-Link)

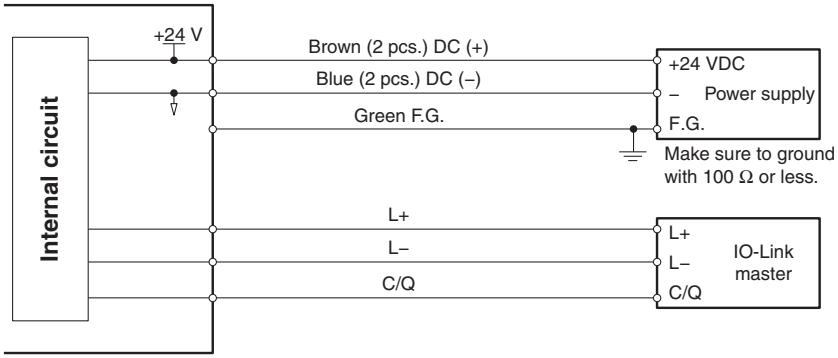

Wiring Circuit: IZT43

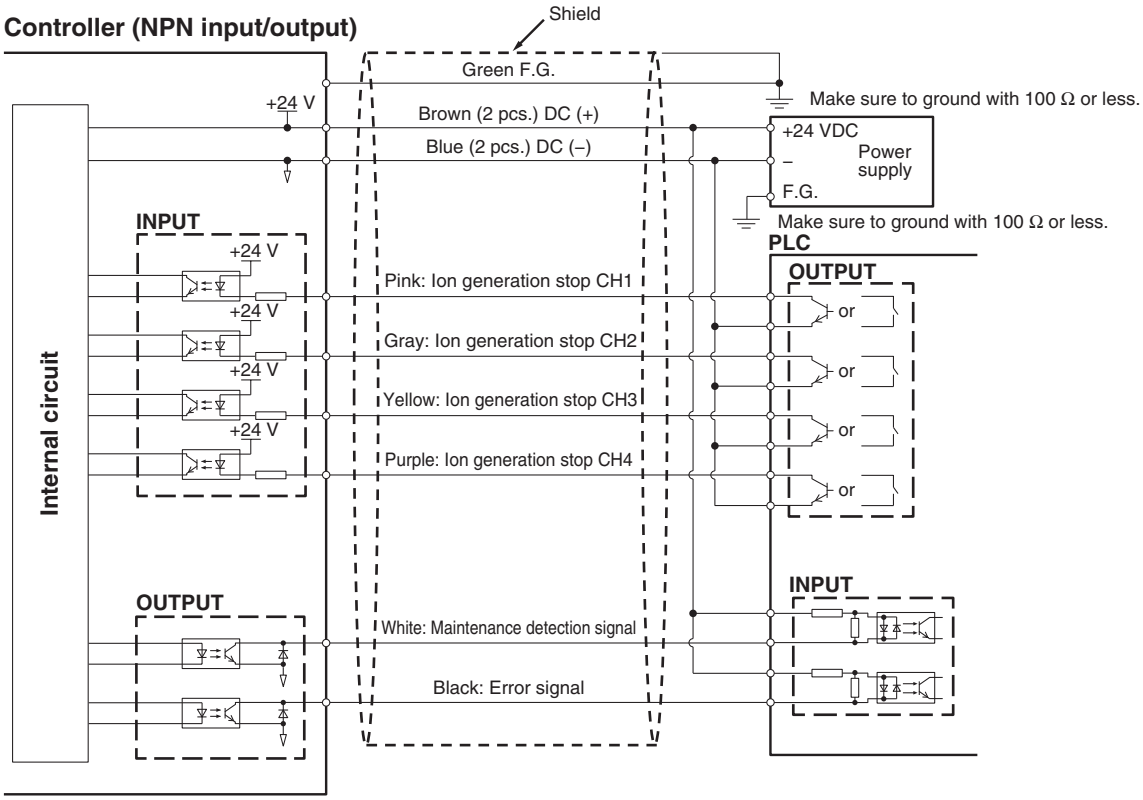

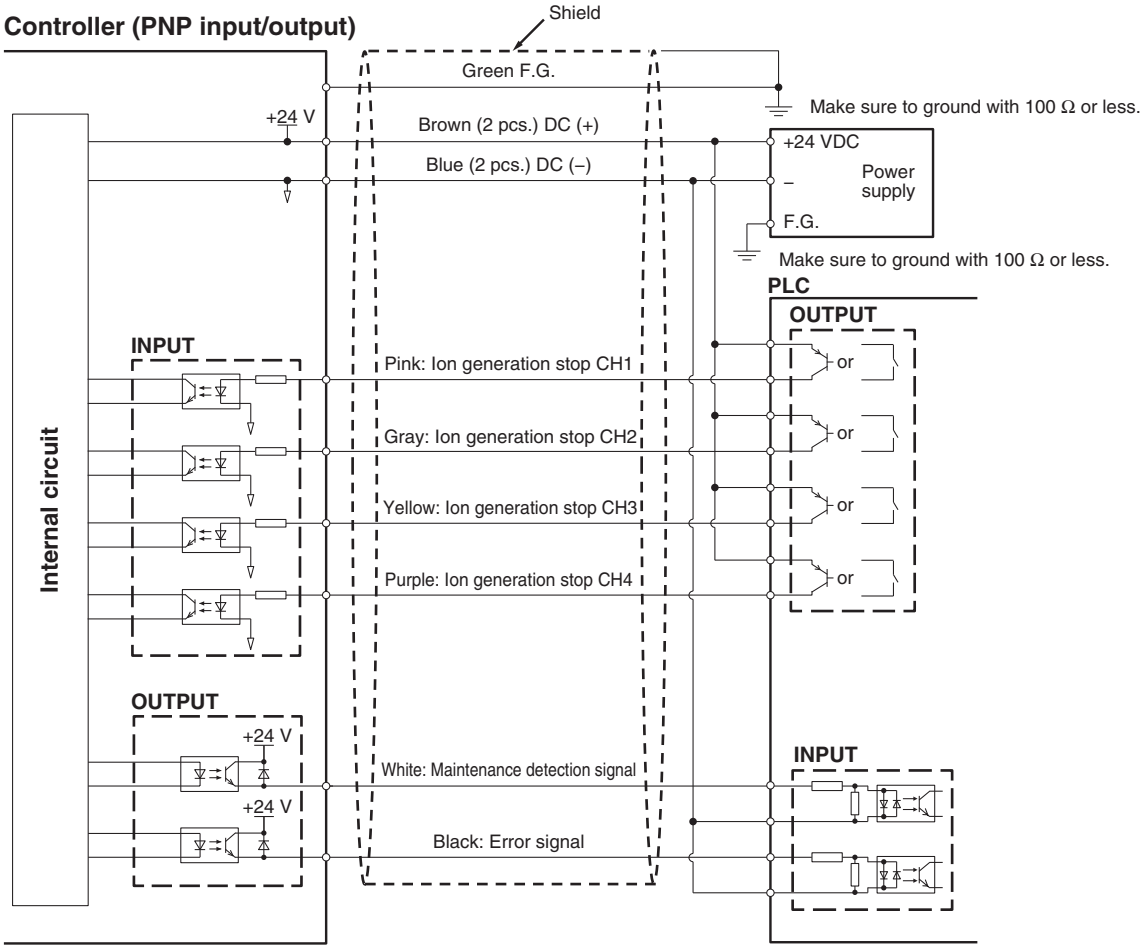

Dimensions

Ionizer IZT43(-L)

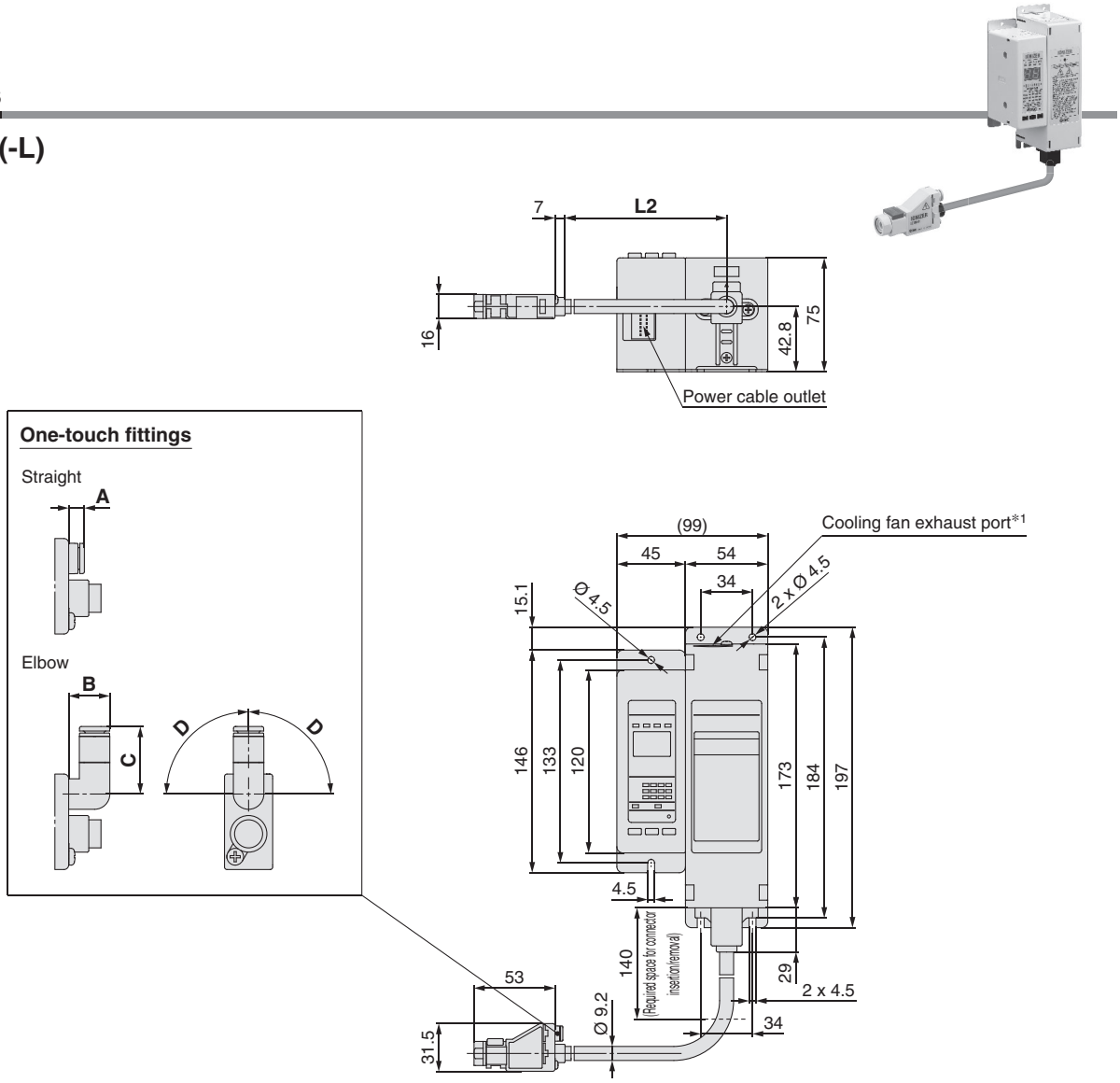

*1 Refer to Mounting (12) in the Specific Product Precautions (page 66).

High Voltage Cable Length L2

Symbol	L2 [mm]
1	1000
2	2000
3	3000

One-touch Fittings

Straight [mm]

	Applicable tubing O.D.	A
Metric	Ø 6	7
Inch	Ø 1/4"	10

Elbow [mm]

	Applicable tubing O.D.	B	C	D
Metric	Ø 6	14	23	105°
Inch	Ø 1/4"	14	26	105°

Dimensions

L-bracket IZT43-BL1

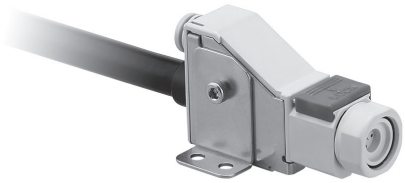

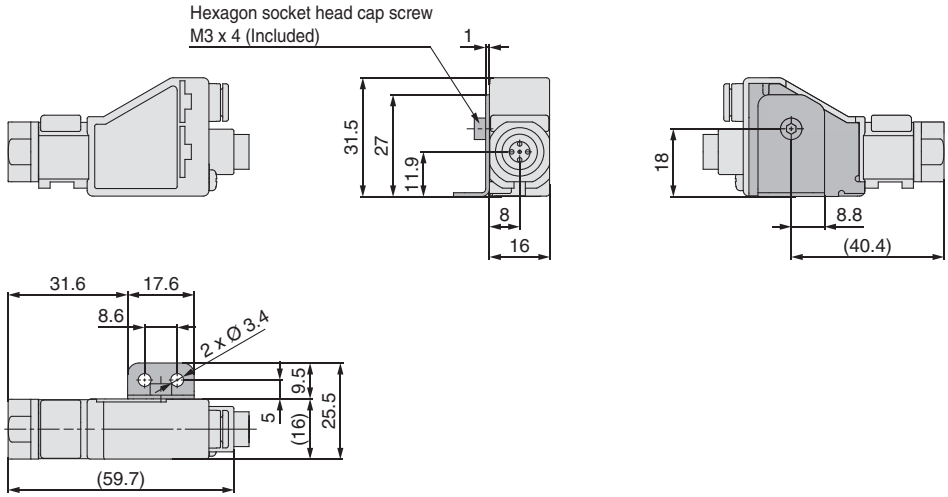

Angle adjustment bracket IZT43-BL2

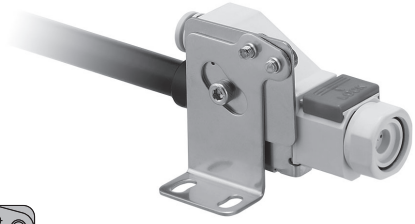

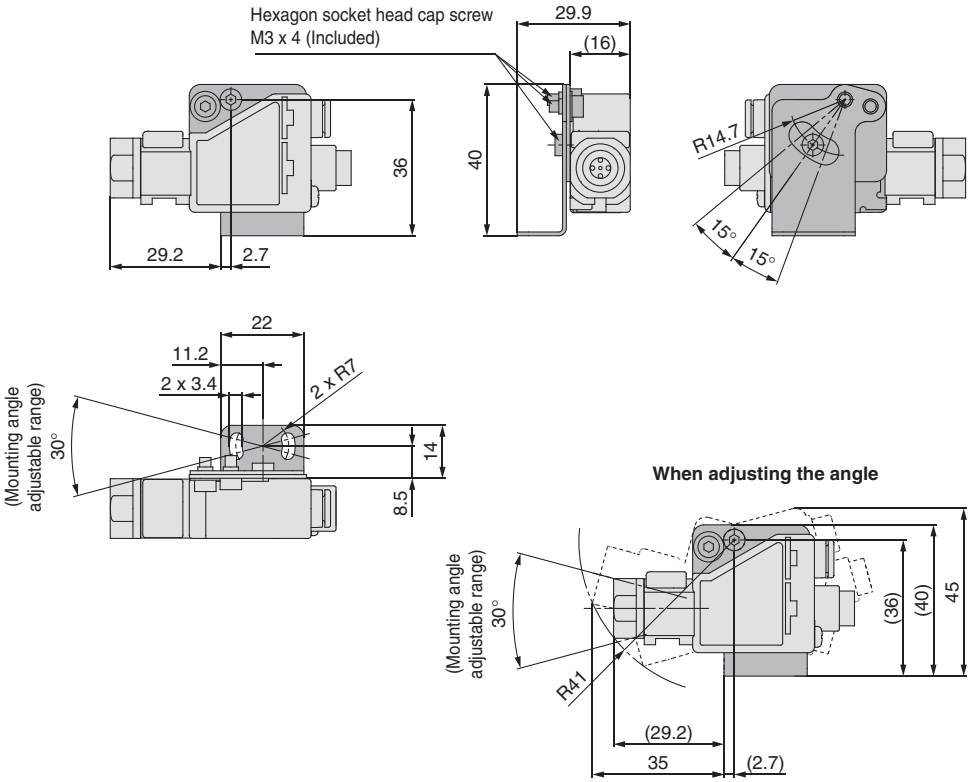

Dimensions

Controller IZT43

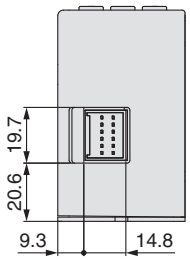

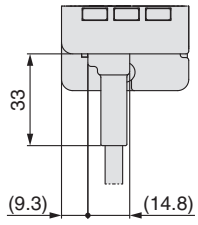

When a power supply cable is inserted

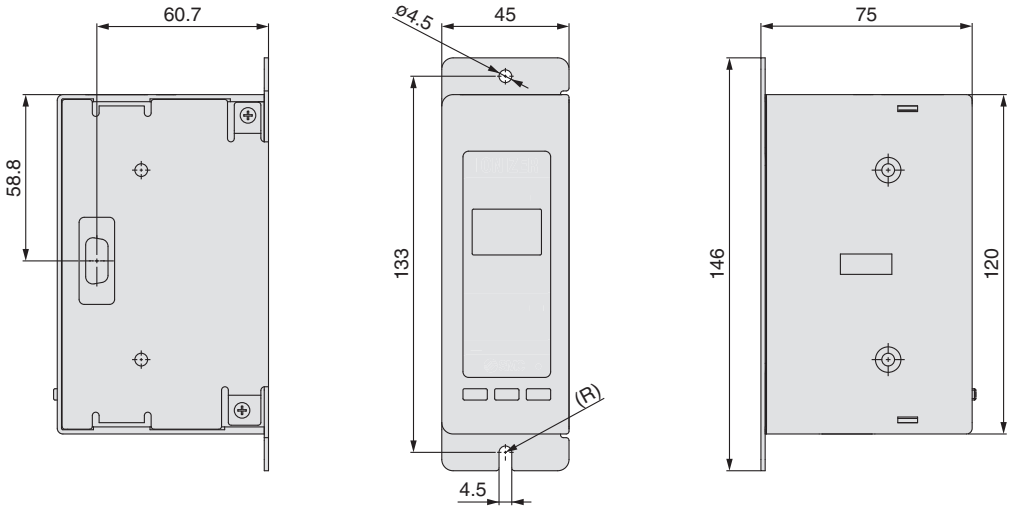

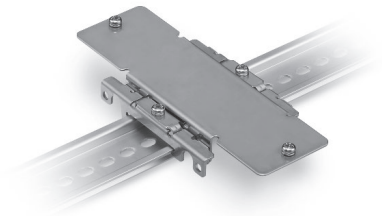

When a DIN rail mounting bracket (IZT40-B1) is used

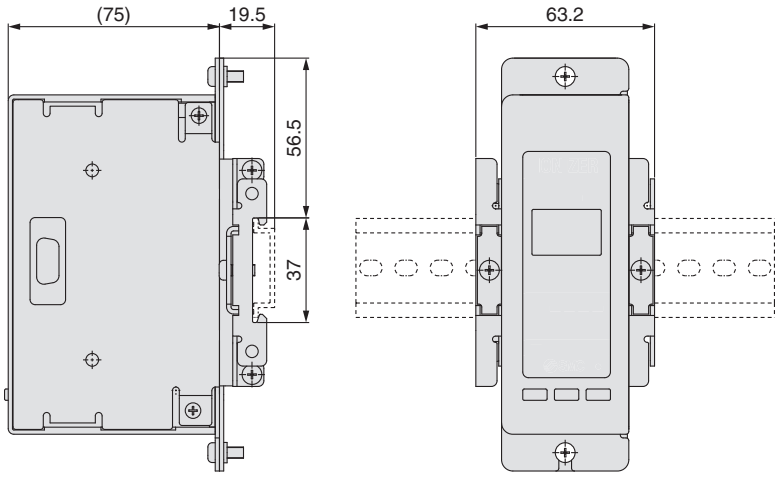

Dimensions

Controller IZT43-L

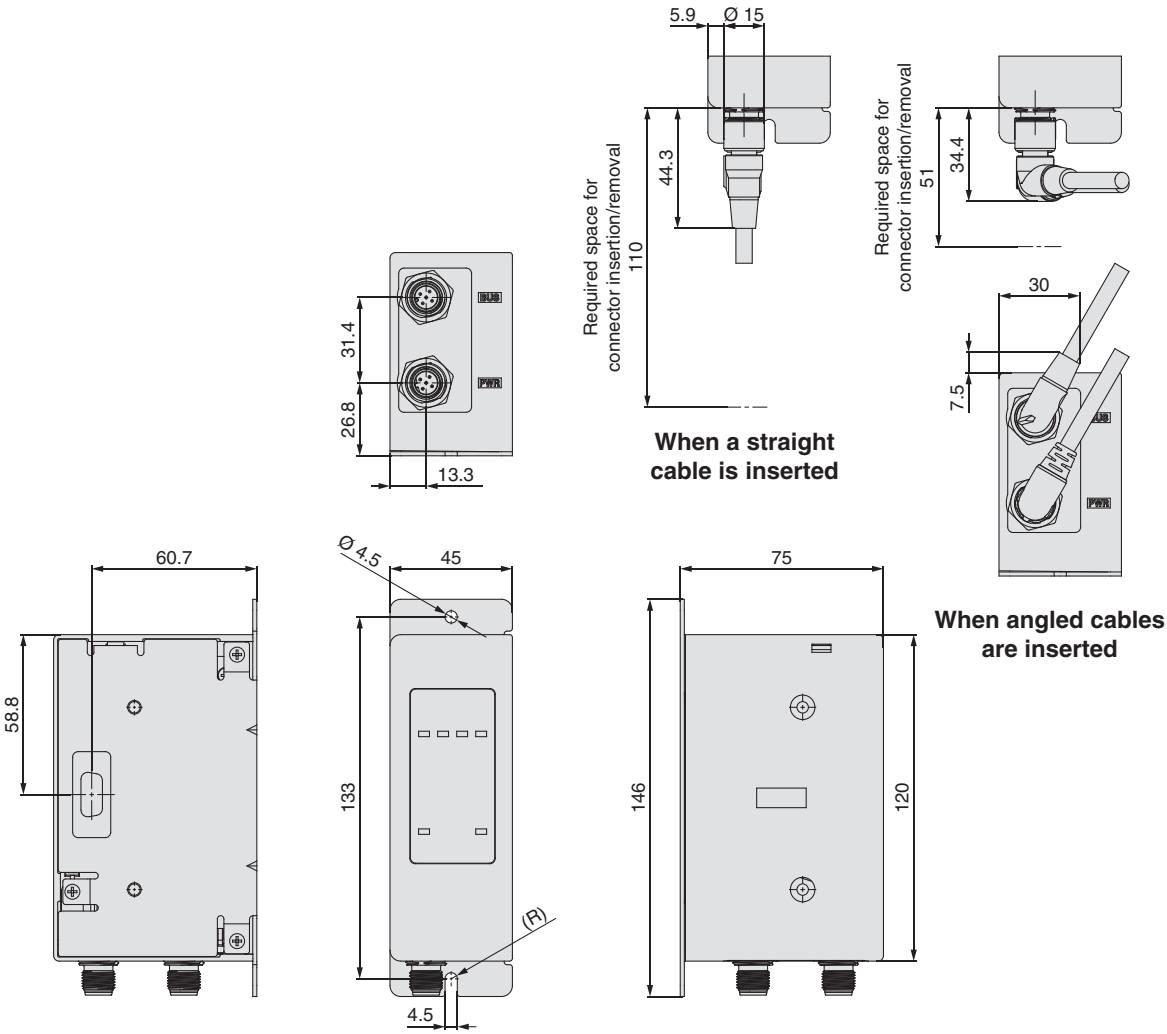

When a DIN rail mounting bracket (IZT40-B1) is used

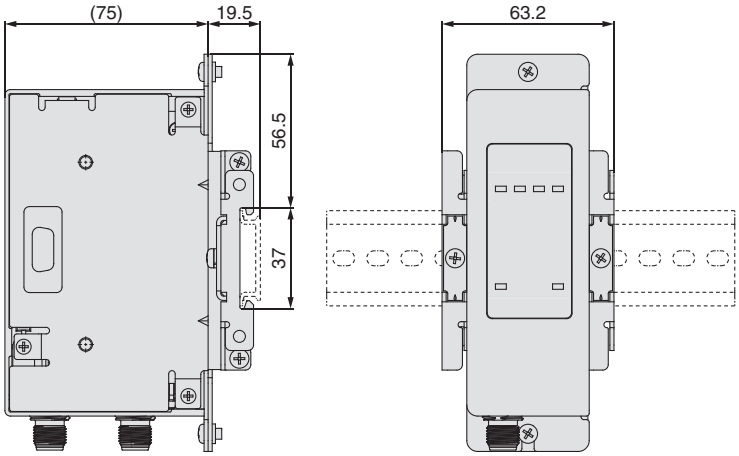

Dimensions

High voltage power supply module for IZT43(-L)

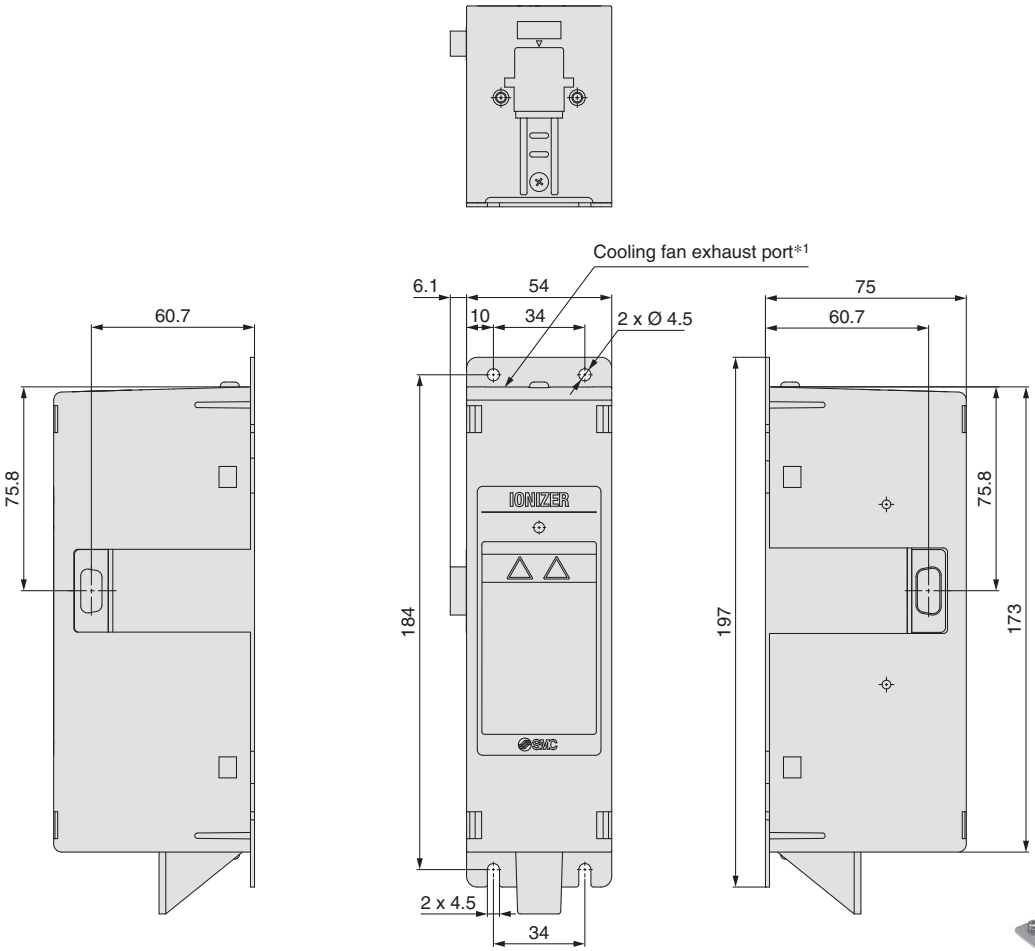

*1 Refer to Mounting (12) in the Specific Product Precautions (page 66).

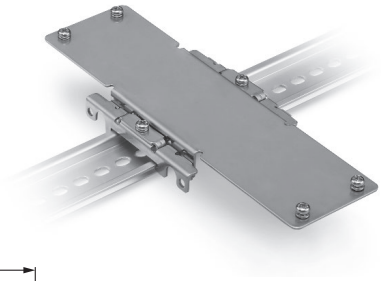

When a DIN rail mounting bracket (IZT40-B2) is used

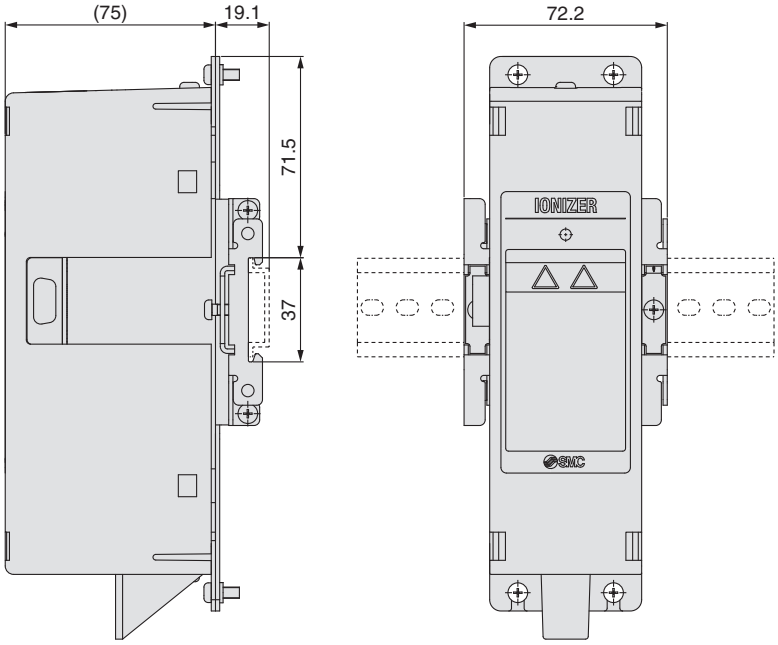

Dimensions

Power supply cable IZT43

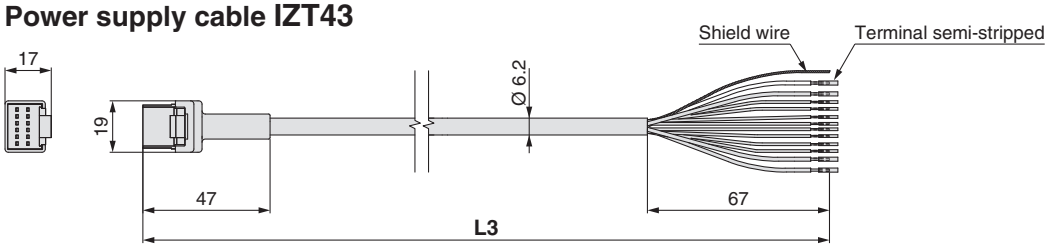

Cable Length L3

Part number	**L3** [mm]
IZT40-CP3	2950
IZT40-CP5	5000
IZT40-CP10	9800
IZT40-CP15	15000

Cable Specifications

No. of cable wires/Size		12 cores/AWG20 (4 cores), AWG28 (8 cores)
Conductor	Nominal cross section	0.54 mm² (4 cores), 0.09 mm² (8 cores)
	O.D.	0.96 mm (4 cores), 0.38 mm (8 cores)
Insulator	O.D.	1.4 mm Brown, Blue
		0.7 mm White, Green, Pink, Purple, Grey, Yellow, Orange, Black
Sheath	Material	Lead-free PVC
	O.D.	6.2 mm

IO-Link power supply cable IZT43-L

Entry direction: Straight

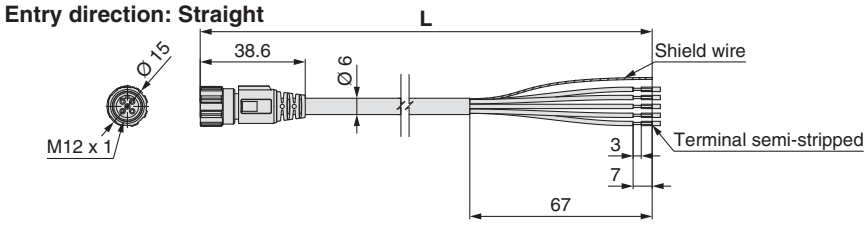

Entry direction: Angled

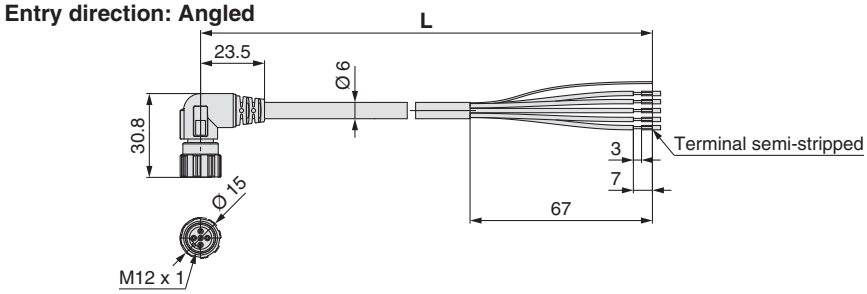

Power Supply Cable Length L

Symbol	Entry direction	Length [m]
IZT41-CPJ	Straight	3
IZT41-CPK		5
IZT41-CPM		10
IZT41-CPS	Angled	3
IZT41-CPT		5
IZT41-CPZ		10

Power Supply Cable Specifications

No. of cable wires/Size		5 cores/AWG22
Conductor	Nominal cross section	0.3 mm²
	O.D.	0.76 mm
Insulator	O.D.	1.3 mm
Sheath	Material	PVC (Lead-free)
	O.D.	6.0 mm

IO-Link communication cable IZT43-L

Entry direction: Straight

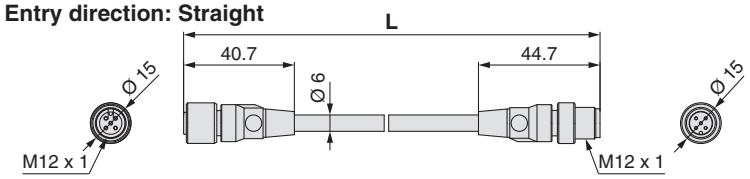

Entry direction: Angled

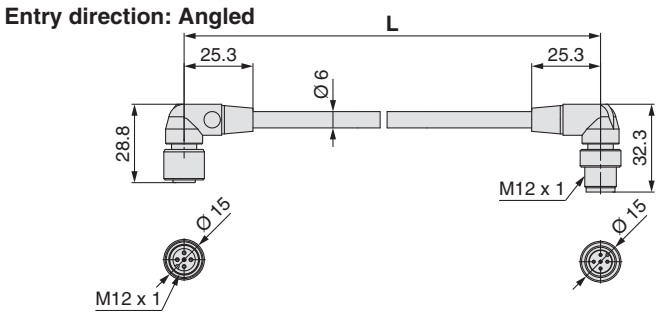

Communication Cable Length L

Symbol	Entry direction	Length [m]
IZT41-CEE	Straight	0.5
IZT41-CEG		1
IZT41-CEH		2
IZT41-CEJ		3
IZT41-CEK		5
IZT41-CEM		10
IZT41-CEP	Angled	0.5
IZT41-CEQ		1
IZT41-CER		2
IZT41-CES		3
IZT41-CET		5
IZT41-CEZ		10

Communication Cable Specifications

No. of cable wires/Size		5 cores/AWG22
Conductor	Nominal cross section	0.3 mm²
	O.D.	0.76 mm
Insulator	O.D.	1.5 mm
Sheath	Material	PVC (Lead-free)
	O.D.	6.0 mm

Dimensions

Separate cable IZT40-CF□

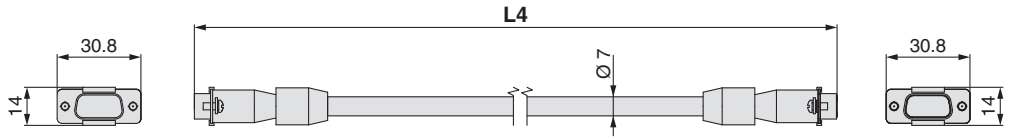

Cable Length L4

Part number	**L4** [mm]
IZT40-CF1	1000
IZT40-CF2	2000
IZT40-CF3	3000

When a separate cable is used

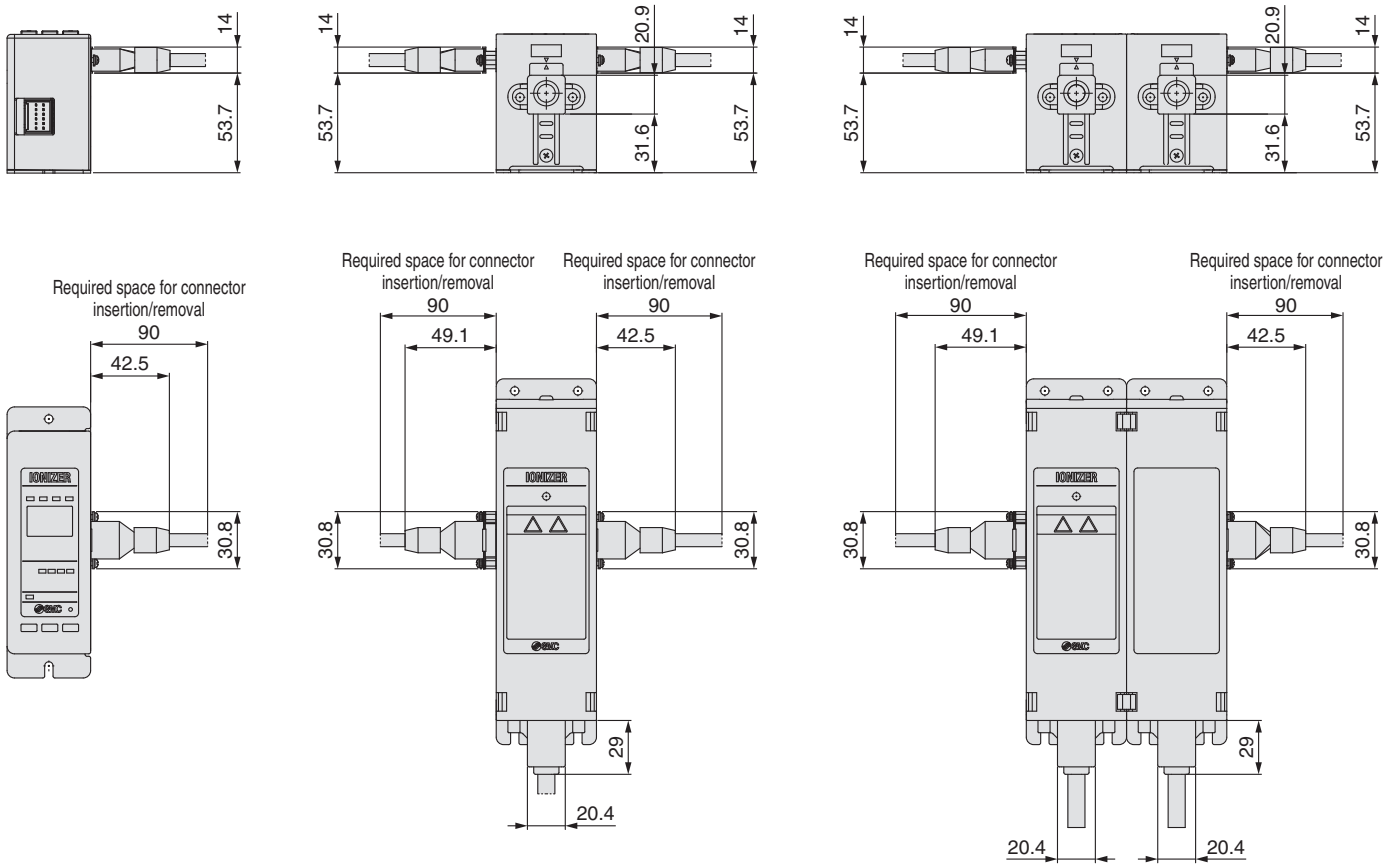

Dimensions

High voltage cable assembly IZT43-A002-□

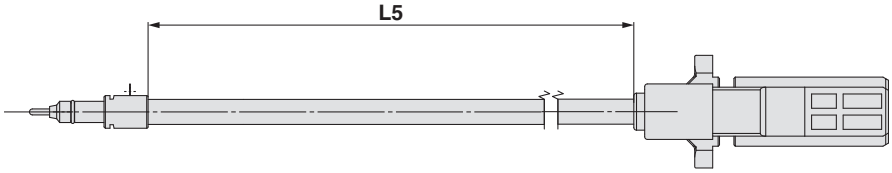

Cable Length L5

Part number	**L5** [mm]
IZT43-A002-1	1000
IZT43-A002-2	2000
IZT43-A002-3	3000

High voltage cable holder

Straight IZT40-E1

Cross-sectional view A-A

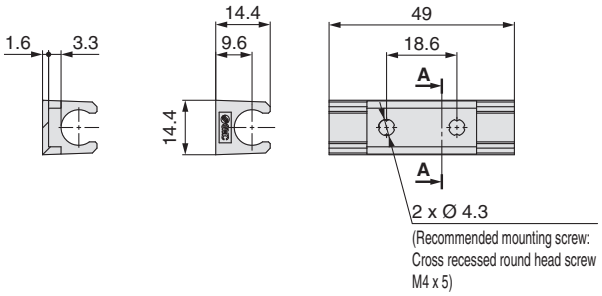

Elbow IZT40-E2

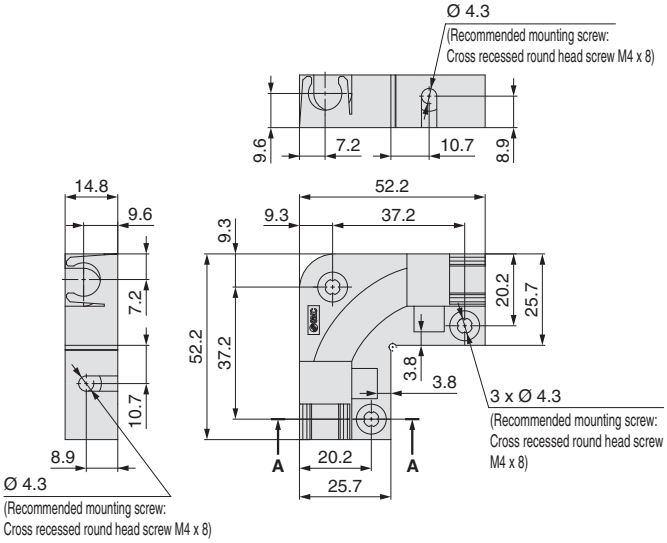

Cross-sectional view A-A

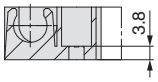

Glossary

1 Discharge Time

Time required for the voltage (attributed to static electric charge) attenuating from an initial value to the arbitrarily selected final value [JIS C 61340-4-7]
The graph shows the time required for the charged plate voltage being discharged from 1000 V to 100 V.

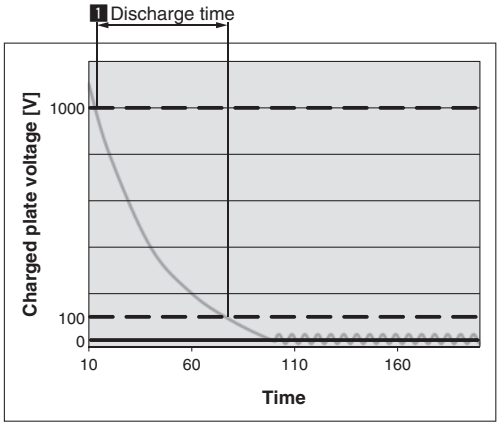

2 Offset Voltage

Voltage which can be measured from the insulated conductive charged plate mounted to the charged plate monitor in the ionized atmosphere [JIS C 61340-4-7]
This catalogue shows the average offset voltage between 1 and 2 minutes after starting the measurement.

3 Peak Offset Voltage

The peak voltage of the pulse voltage type ionizer when considering the offset value of each polarity as an absolute value when the offset voltage fluctuates to the positive and negative side periodically, based on the periodical fluctuation of the ion output from positive to negative [JIS C 61340-4-7]

4 Potential Amplitude

The p-p voltage value is measured by the charged plate using the AC method in which positive and negative ion output fluctuates periodically. [SMC technical term]
The voltage is measured between 1 and 2 minutes after starting the measurement, and the difference between the maximum and minimum values is indicated.

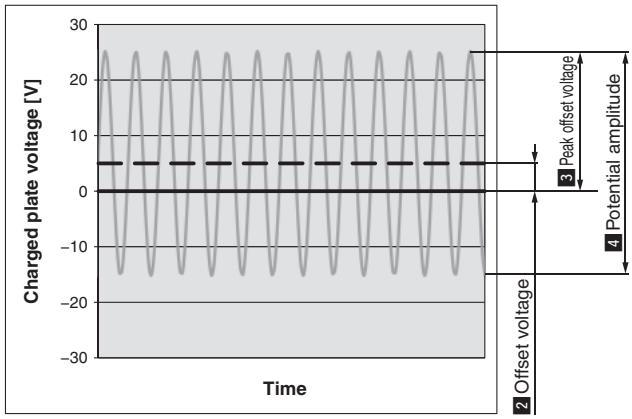

IZT40/41(-L)/42(-L)/43(-L) Series
Specific Product Precautions 1

Be sure to read this before handling the products.
Refer to the back cover for safety instructions.

Selection

⚠ Warning

1. This product is intended to be used with general factory automation (FA) equipment.
- If considering using the product for other applications (especially those indicated in Warning (4) on the back cover), please consult with SMC beforehand.

2. Use this product within the specified voltage and temperature range.
- Using outside of the specified voltage can cause a malfunction, damage, electrical shock, or fire.

3. Use clean compressed air as fluid. (Compressed air quality of Class 2.4.3., 2.5.3., 2.6.3 or higher according to ISO 8573-1:2010 (JIS B 8392-1:2012) is recommended for operation.)
- This product is not explosion proof. Never use a flammable gas or an explosive gas as a fluid and never use this product in the presence of such gases.
- Please contact us when fluids other than compressed air are used.

4. This product is not explosion-protected.
- Never use this product in locations where the explosion of dust is likely to occur or flammable or explosive gases are used. This can cause a fire.

⚠ Caution

1. Clean specification is not available with this product.
- A minute amount of particles are generated due to wearing of the emitters while the product is operating.
- When bringing into a clean room, confirm the required cleanliness before use.

Mounting

⚠ Warning

1. Reserve enough space for maintenance, piping, and wiring.
- Please take into consideration that the connector connecting part, plug connecting part, and One-touch fittings for supplying air need enough space for the cable and air tubing to be easily attached/detached.
- To avoid unreasonable stress applied to the connector mounting part, plug connecting part, and One-touch fitting mounting part, bending of the cable or air tubing should be more than the minimum bending radius.
- If the cable is bent in an acute angle or load is applied to the cable repeatedly, it may cause a malfunction, wire damage or fire.

[Minimum bending radius] Power supply cable: 40 mm
Power supply cable: 48 mm (IO-Link)
Communication cable: 40 mm (IO-Link)
Separate cable (Option): 40 mm
High voltage cable: 30 mm

∗ Shown above is wiring with the fixed minimum allowable bending radius and at a temperature of 20 °C. A bend radius should be larger at a temperature lower than 20 °C. Regarding the minimum bending radius of the air tubing, refer to the operation manual or catalogue for air tubing.

2. Installation of the high voltage cable
- Use the specified cable holder (IZT40-E1 or IZT40-E2) for installing high voltage cables.
- Follow the instructions below when installing high voltage cables. If these are not followed, the insulation performance of the high voltage cable will decrease, causing failure of the ionizer, which may lead to electrical shock or fire.
  a. Do not cut the cable.
  b. Keep to the minimum bending radius of the cable.
  c. Do not tighten the cable too much with cable ties. Do not deform the cable by placing any object on the cable.
  d. Avoid the problems of cable runaway such as in a cable duct.
  e. Do not twist or damage the cable. If the cable is damaged, it should be replaced.

IZT40/41(-L)/42(-L)/43(-L) Series
Specific Product Precautions 2

Be sure to read this before handling the products.
Refer to the back cover for safety instructions.

Mounting

⚠ Warning

3. Fix the high voltage cable connector using 2 screws included as an accessory.
- Fix the connector using 2 cross recessed round head screws (M4 x 10 L) with the specified tightening torque. (Refer to the table below.)

4. Be sure to fix the high voltage cable plug with a screw.

5. Mount on a flat surface and do not apply impact load or excessive external force.
- If there are irregularities, cracks or height differences, excessive stress will be applied to the housing or brackets, resulting in damage or other trouble.
- Do not drop or apply a strong shock. Otherwise, damage or an accident can occur.

6. Install the product so that the bar does not have an excessive deflection.
- For a bar length of 820 mm or more, be sure to support the bar at both ends and in the middle by using brackets (IZT40-BM1 or IZT40-BM2). If the bar is held only at the both ends, self-weight of the bar causes deflection, resulting in damage or deformation of the bar.

7. Avoid using in a place where noise (electromagnetic wave surge) is generated.
- If the product is used in an environment where noise is generated, it may lead to a malfunction and deterioration or damage of the internal elements.
- If the presence of noise is suspected, take preventative measures against noise and avoid crossing wires such as power line and high voltage line.

8. Tighten screws with the specified tightening torque.
- If the mounting screws are tightened in excess of the specified torque range, it may damage the screws or mounted areas.
- If the tightening torque is insufficient, the screws may become loose. (Refer to the table below.)

9. Do not touch the emitter directly with fingers or metallic tools.
- Do not touch the emitter with your finger. If the needle sticks to your finger, an electrical shock can cause an instantaneous rapid body motion to escape from the shock, causing injury.
- If the emitter or cartridge is damaged with a tool, the specification will not be met and damage and/or an accident may occur.

⚠ Danger High Voltage

The emitter carries a high voltage. If foreign matter is inserted or there is human contact with the emitter, an electrical shock, or an instantaneous body reaction to escape from the shock, can cause injury.

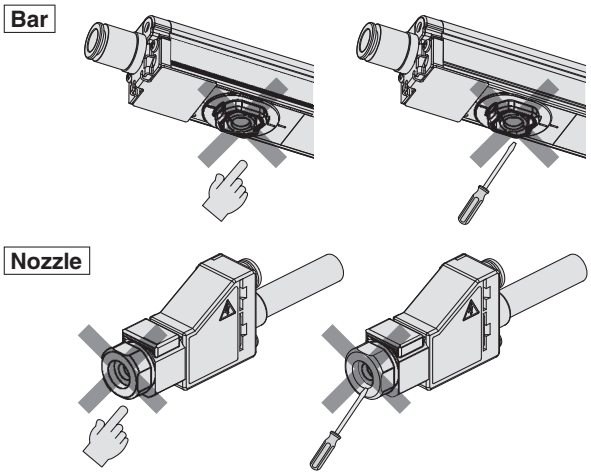

Tightening Torque for Screws

Description		Part number	Screw	Tightening torque
For Bar	End bracket	IZT40-BE□	For fixed angle M4 x 8 L	0.72 to 0.76 N·m
			For fixed bar M4 x 8 L	0.51 to 0.55 N·m
	Intermediate bracket 1	IZT40-BM1	M4 x 16 L	0.72 to 0.76 N·m
	Intermediate bracket 2	IZT40-BM2	M4 x 16 L	0.47 to 0.49 N·m
	High voltage cable connector	IZTB4□-□□□□□-□-□	M4 x 10 L	0.49 to 0.53 N·m
For Nozzle	L-bracket	IZT43-B1	M3 x 4 L	0.61 to 0.65 N·m
	Angle adjustment bracket	IZT43-B2	For fixed angle M3 x 4 L	0.61 to 0.65 N·m
			For fixed nozzle M3 x 4 L	0.61 to 0.65 N·m
	High voltage cable connector	IZTN43-□□□□-□	M4 x 10 L	0.49 to 0.53 N·m
	High voltage cable plug		M3 x 5 L	0.11 to 0.15 N·m
Controller		IZTC40 IZTC41(-L)	M4 x 30 L	0.22 to 0.24 N·m
Separate cable		IZT40-CF□	Spacer	0.40 to 0.60 N·m
			Set screw	0.25 to 0.35 N·m
DIN rail mounting bracket		IZT40-B□	M4 x 6 L	1.30 to 1.50 N·m
Cable holder		IZT40-E□	M4 x 8 L (Recommended length)	0.19 to 0.21 N·m

IZT40/41(-L)/42(-L)/43(-L) Series
Specific Product Precautions 3

Be sure to read this before handling the products.
Refer to the back cover for safety instructions.

Mounting

⚠ Warning

10. Do not affix any tape or seals to the controller, high voltage power supply module, bar, and nozzle.
- If the tape or label contains a conductive adhesive or reflective paint, a dielectric phenomenon may occur due to ions arising from such substances, resulting in electrostatic charging or electric leakage, causing a malfunction, damage, electric shock or fire.

11. Installation should be conducted after turning off the power supply and air supply to the controller, high voltage power supply module, bar, and nozzle.
- If installation or adjustment is performed power or air supplied, electric shock, failure or injury can result.

12. The high voltage power supply module uses a fan. A space of 20 mm or more is required from the exhaust port for ventilation. Install the product in a ventilated location so peripheral devices are not affected.

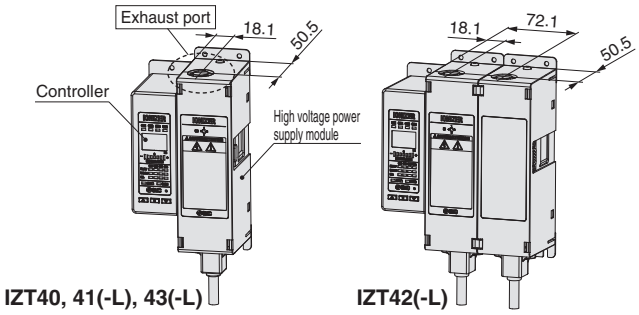

13. Do not apply any excessive force to cables, such as repeated bending, tensioning, or placing a heavy object on the cables.
- It may cause an electric shock, fire, or the breaking of a wire.

14. Do not carry the product by holding its cables.
- It may cause an injury or damage to the product.

⚠ Caution

1. When the IZT40, IZT41, IZT42, or IZT43 series is installed, maintain a space from structures or components.
- If there are electrically conductive objects such as walls or structures close to the bar, generated ions may not reach the target object effectively or product failure or electric shock can result due to dielectric or short-circuit.

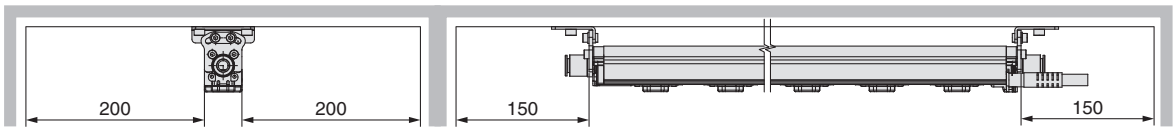

Unit: mm

2. Make sure to confirm the effect of static neutralisation after installation.
- The performance of the product varies depending on the surrounding installation and operating conditions. After installation, verify the effects of static neutralisation.

3. When installing the IZT41, IZT42, or IZT43 in proximity with an ionizer which operates in DC mode (one polarity, positive or negative), they should be positioned at least 2 meters away from each other.
- When using the AC mode of the IZT41, IZT42, or IZT43 near the ionizer in DC mode, keep clearance of at least the length shown in the figure below between them. The offset voltage (ion balance) may not be adjusted by the built-in sensor due to the ions discharged from the DC mode ionizer.

Bar

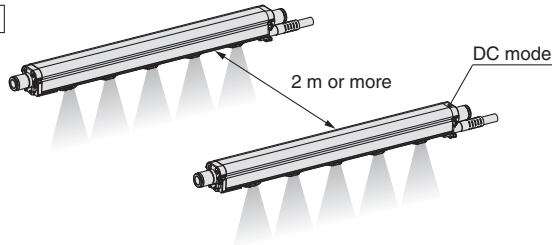

Nozzle

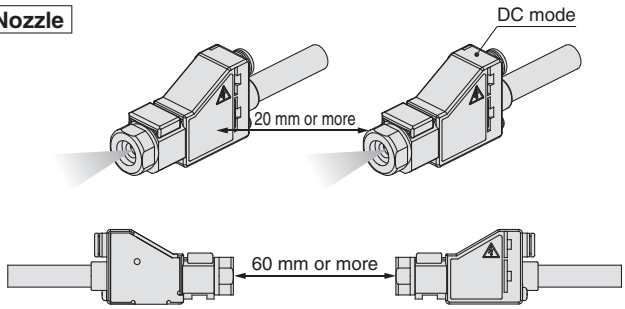

4. Use the specified bracket.

IZT40/41(-L)/42(-L)/43(-L) Series
Specific Product Precautions 4

Be sure to read this before handling the products.
Refer to the back cover for safety instructions.

Wiring / Piping

⚠ Warning

1. **Before wiring, ensure that the power supply capacity is larger than the specification and that the voltage is within the specification. Product damage or malfunction can result.**
2. **To maintain product performance, the power supply shall be UL listed Class 2 certified by National Electric Code (NEC) or evaluated as a limited power source provided by UL60950.**
3. **To maintain the product performance, ground the product with an earth ground cable with a resistance of 100 Ω or less. If the product is not grounded, it is not possible to secure the performance and may lead to product failure or malfunction.**
4. **Wiring (including insertion and removal of the connector plug (high voltage cable connector, high voltage cable plug)) should never be carried out with the power supply ON. Otherwise, an electrical shock or accident may occur.**
5. **Use the specified cable for connecting the ionizer controller, high voltage power supply module, bar, and nozzle. Do not disassemble or retrofit. Modifying the product may cause accidents such as electric shock, failure or fire. The product will not be guaranteed if it is disassembled and/or modified.**
6. **Ensure the safety of wiring and surrounding conditions before supplying power.**
7. **Do not connect or disconnect the connector plug (including power source) while the power is supplied. Failure to follow this procedure may cause product malfunction.**
8. **If the ionizer wiring and high power lines are routed together, this product may malfunction due to noise. Therefore, use a separate wiring route for this product.**
9. **Confirm that the wiring is correct before operation. Incorrect wiring will lead to product damage or malfunction.**
10. **Flush the piping before use. Before piping this product, exercise caution to prevent particles, water drops, or oil contents from entering the piping.**

Operating Environment / Storage Environment

⚠ Warning

1. **Observe the fluid temperature and ambient temperature range.**
   - Fluid temperature and ambient temperature ranges are; 0 to 40 °C for controller, 0 to 40 °C for high voltage power supply module, 0 to 50 °C for bar, 0 to 40 °C for nozzle, and 0 to 40 °C for AC adapter.
   - Do not use the product in locations where the temperature may change suddenly even if the ambient temperature range is within the specified limits, resulting in condensation.

Operating Environment / Storage Environment

⚠ Warning

2. **Do not use this product in an enclosed space.**
   - This product utilises a corona discharge phenomenon. Avoid using in an enclosed space as ozone and nitrogen oxides exist in such places, even though in marginal quantities.
3. **Environments to avoid**
   - Never use or store under the following conditions. These may cause a failure, fire, etc.
     a. Environments where the ambient temperature is outside of the product specification
     b. Environments where the ambient humidity is outside of the product specification
     c. Environments where abrupt temperature changes may cause condensation
     d. Environments where corrosive gas, flammable gas or other volatile flammable substances are stored
     e. Environments where the product may be exposed to conductive powder such as iron powder or dust, oil mist, salt, organic solvent, machining chips, particles or cutting oil (including water and any liquids), etc.
     f. Environments where ventilated air from an air conditioner is directly applied to the product
     g. Enclosed or poorly ventilated environments
     h. Environments that are exposed to direct sunlight or heat radiation
     i. Environments where strong electromagnetic noise is generated, such as strong electrical and magnetic fields or supply voltage spikes
     j. Environments where static electricity is generated
     k. Environments where a strong high frequency occurs
     l. Environments that are subject to potential lightning strikes
     m. Environments where the product may receive direct impact or vibration
     n. Environments where the product may be subjected to forces or weight that could cause physical deformation
4. **Do not use an air containing mist or dust.**
   - The air containing mist or dust will cause the performance to decrease and shorten the maintenance cycle.
   - Install an air dryer (IDF series), air filter (AF/AFF series), and/or mist separator (AFM/AM series) to obtain clean compressed air (compressed air quality of Class 2.4.3., 2.5.3., 2.6.3 or higher according to ISO 8573-1:2010 (JIS B 8392-1:2012) is recommended for operation).
5. **Controller, high voltage power supply module, bar, nozzle, and AC adapter are not resistant to lightening surge.**
6. **Effects on implantable medical devices**
   - The electromagnetic waves emitted from this product may interfere with implantable medical devices such as cardiac pacemakers and cardioverter defibrillators, resulting in the malfunction of the medical device or other adverse effects.
   - Please use extreme caution when operating equipment which may have an adverse effect on your implantable medical device. Be sure to thoroughly read the precautions stated in the catalogue, operation manual, etc., of your implantable medical device, or contact the manufacturer directly for further details on what types of equipment need to be avoided.

IZT40/41(-L)/42(-L)/43(-L) Series
Specific Product Precautions 6

Be sure to read this before handling the products.
Refer to the back cover for safety instructions.

Handling

⚠ Caution

1. Do not apply excessive external force or impact (100 m/s² or more).
- Even though the controller, high voltage power supply module, bar, and nozzle do not appear to be damaged, the internal parts may be damaged and cause a malfunction.

2. If the bar length exceeds 8 2 0 mm, hold both ends and the middle of the bar to avoid a moment load being applied.
- Handling the product by holding either end of the bar may cause deformation or damage of the product.

3 . The power cable must be connected and disconnected by hand.
- The use of tools can result in damage to the product.
- Hold the connector by hand and pull it out straight.
- If the connector has a lock mechanism, release the lock and then pull out the connector.

4. If smoking, fire, or foul smell occurs in the product, immediately shut off the power supply.

5. Do not touch part A of the high voltage connector and part B of the high voltage cable plug by hand. Be careful that moisture or foreign matter does not adhere to the connector and plug.
- Do not touch part A of the high voltage connector and part B of the high voltage cable plug while handling.
- Keep the high voltage connector and high voltage cable plug free from contamination. Adhesion of moisture, oil, or foreign matter on part A and part B may cause high voltage electric leakage.
- If moisture, oil, or foreign matter adheres to part A or part B, clean it with ethanol.

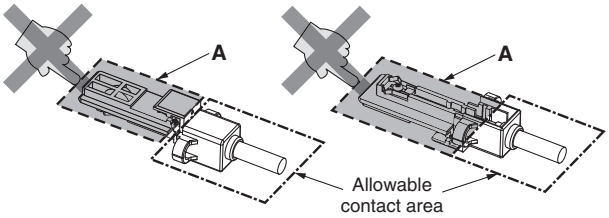

High voltage connector

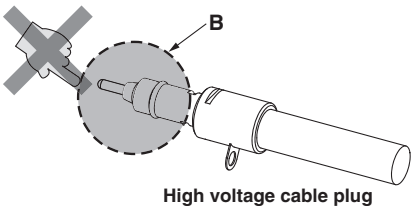

High voltage cable plug

Handling

⚠ Caution

6. Tightening of M12 connector screw
- The screws may become loose if they are not tightened sufficiently.
- Check that they are tightened enough at appropriate intervals during operation.

7. Connection and disconnection of M12 connector
- Do not touch the engagement surface with wet hands.
- Do not pull the cable out by holding the cable.
- Note the key direction.
- When engaging the connectors, insert the connectors until the entire engagement surface is no longer visible and tighten the screws so as not to damage the thread ridges.

Adjustment / Operation

⚠ Caution

1. For details on programming and address setting, refer to the manual from the PLC manufacturer. The programming content related to the protocol is designed by the manufacturer of the PLC used.

⚠ Safety Instructions

These safety instructions are intended to prevent hazardous situations and/or equipment damage. These instructions indicate the level of potential hazard with the labels of **"Caution," "Warning"** or **"Danger."** They are all important notes for safety and must be followed in addition to International Standards (ISO/IEC) [1], and other safety regulations.

⚠ **Caution:**	**Caution** indicates a hazard with a low level of risk which, if not avoided, could result in minor or moderate injury.
⚠ **Warning:**	**Warning** indicates a hazard with a medium level of risk which, if not avoided, could result in death or serious injury.
⚠ **Danger:**	**Danger** indicates a hazard with a high level of risk which, if not avoided, will result in death or serious injury.

1) ISO 4414: Pneumatic fluid power – General rules relating to systems.
ISO 4413: Hydraulic fluid power – General rules relating to systems.
IEC 60204-1: Safety of machinery – Electrical equipment of machines. (Part 1: General requirements)
ISO 10218-1: Manipulating industrial robots - Safety.
etc.

⚠ Warning

1. The compatibility of the product is the responsibility of the person who designs the equipment or decides its specifications.
Since the product specified here is used under various operating conditions, its compatibility with specific equipment must be decided by the person who designs the equipment or decides its specifications based on necessary analysis and test results. The expected performance and safety assurance of the equipment will be the responsibility of the person who has determined its compatibility with the product. This person should also continuously review all specifications of the product referring to its latest catalogueue information, with a view to giving due consideration to any possibility of equipment failure when configuring the equipment.

2. Only personnel with appropriate training should operate machinery and equipment.
The product specified here may become unsafe if handled incorrectly. The assembly, operation and maintenance of machines or equipment including our products must be performed by an operator who is appropriately trained and experienced.

3. Do not service or attempt to remove product and machinery/equipment until safety is confirmed.
1. The inspection and maintenance of machinery/equipment should only be performed after measures to prevent falling or runaway of the driven objects have been confirmed.
2. When the product is to be removed, confirm that the safety measures as mentioned above are implemented and the power from any appropriate source is cut, and read and understand the specific product precautions of all relevant products carefully.
3. Before machinery/equipment is restarted, take measures to prevent unexpected operation and malfunction.

4. Contact SMC beforehand and take special consideration of safety measures if the product is to be used in any of the following conditions.
1. Conditions and environments outside of the given specifications, or use outdoors or in a place exposed to direct sunlight.
2. Installation on equipment in conjunction with atomic energy, railways, air navigation, space, shipping, vehicles, military, medical treatment, combustion and recreation, or equipment in contact with food and beverages, emergency stop circuits, clutch and brake circuits in press applications, safety equipment or other applications unsuitable for the standard specifications described in the product catalogueue.
3. An application which could have negative effects on people, property, or animals requiring special safety analysis.
4. Use in an interlock circuit, which requires the provision of double interlock for possible failure by using a mechanical protective function, and periodical checks to confirm proper operation.

⚠ Caution

1. The product is provided for use in manufacturing industries.
The product herein described is basically provided for peaceful use in manufacturing industries.
If considering using the product in other industries, consult SMC beforehand and exchange specifications or a contract if necessary.
If anything is unclear, contact your nearest sales branch.

Limited warranty and Disclaimer/Compliance Requirements

The product used is subject to the following "Limited warranty and Disclaimer" and "Compliance Requirements".Read and accept them before using the product.

Limited warranty and Disclaimer

1. The warranty period of the product is 1 year in service or 1.5 years after the product is delivered, whichever is first. [2] Also, the product may have specified durability, running distance or replacement parts. Please consult your nearest sales branch.
2. For any failure or damage reported within the warranty period which is clearly our responsibility, a replacement product or necessary parts will be provided. This limited warranty applies only to our product independently, and not to any other damage incurred due to the failure of the product.
3. Prior to using SMC products, please read and understand the warranty terms and disclaimers noted in the specified catalogueue for the particular products.

2) Vacuum pads are excluded from this 1 year warranty.
A vacuum pad is a consumable part, so it is warranted for a year after it is delivered. Also, even within the warranty period, the wear of a product due to the use of the vacuum pad or failure due to the deterioration of rubber material are not covered by the limited warranty.

Compliance Requirements

1. The use of SMC products with production equipment for the manufacture of weapons of mass destruction (WMD) or any other weapon is strictly prohibited.
2. The exports of SMC products or technology from one country to another are governed by the relevant security laws and regulations of the countries involved in the transaction. Prior to the shipment of a SMC product to another country, assure that all local rules governing that export are known and followed.

⚠ Caution

SMC products are not intended for use as instruments for legal metrology.
Measurement instruments that SMC manufactures or sells have not been qualified by type approval tests relevant to the metrology (measurement) laws of each country.
Therefore, SMC products cannot be used for business or certification ordained by the metrology (measurement) laws of each country.

Revision History

Edition B	- The energy saving high-efficiency cartridge has been added. - The contents of the technical data have been revised. - The weight of the high voltage power supply module has been changed. - Information on the effects on implantable medical devices has been added to the specific product precautions. - Number of pages has been increased from 40 to 44.	YQ
Edition C	- The nozzle type, IZT43 series has been added. - Number of pages has been increased from 44 to 64.	YU
Edition D	- An IO-Link type has been added to the IZT41/42/43 - Number of pages has been increased from 64 to 72.	ZX

SMC Corporation (Europe)

Austria	+43 (0)2262622800	www.smc.at	office@smc.at
Belgium	+32 (0)33551464	www.smc.be	info@smc.be
Bulgaria	+359 (0)2807670	www.smc.bg	office@smc.bg
Croatia	+385 (0)13707288	www.smc.hr	office@smc.hr
Czech Republic	+420 541424611	www.smc.cz	office@smc.cz
Denmark	+45 70252900	www.smcdk.com	smc@smcdk.com
Estonia	+372 651 0370	www.smcee.ee	info@smcee.ee
Finland	+358 207513513	www.smc.fi	smcfi@smc.fi
France	+33 (0)164761000	www.smc-france.fr	supportclient@smc-france.fr
Germany	+49 (0)61034020	www.smc.de	info@smc.de
Greece	+30 210 2717265	www.smchellas.gr	sales@smchellas.gr
Hungary	+36 23513000	www.smc.hu	office@smc.hu
Ireland	+353 (0)14039000	www.smcautomation.ie	sales@smcautomation.ie
Italy	+39 03990691	www.smcitalia.it	mailbox@smcitalia.it
Latvia	+371 67817700	www.smc.lv	info@smc.lv
Lithuania	+370 5 2308118	www.smclt.lt	info@smclt.lt
Netherlands	+31 (0)205318888	www.smc.nl	info@smc.nl
Norway	+47 67129020	www.smc-norge.no	post@smc-norge.no
Poland	+48 222119600	www.smc.pl	office@smc.pl
Portugal	+351 214724500	www.smc.eu	apoioclientept@smc.smces.es
Romania	+40 213205111	www.smcromania.ro	smcromania@smcromania.ro
Russia	+7 (812)3036600	www.smc.eu	sales@smcru.com
Slovakia	+421 (0)413213212	www.smc.sk	office@smc.sk
Slovenia	+386 (0)73885412	www.smc.si	office@smc.si
Spain	+34 945184100	www.smc.eu	post@smc.smces.es
Sweden	+46 (0)86031240	www.smc.nu	smc@smc.nu
Switzerland	+41 (0)523963131	www.smc.ch	info@smc.ch
Turkey	+90 212 489 0 440	www.smcturkey.com.tr	satis@smcturkey.com.tr
UK	+44 (0)845 121 5122	www.smc.uk	sales@smc.uk
South Africa	+27 10 900 1233	www.smcza.co.za	zasales@smcza.co.za

Printing ZY 00 Printed in Spain

Specifications are subject to change without prior notice and any obligation on the part of the manufacturer